INSTITUTE OF TEXTILE TECHNOLOGY

POWER STATION ENGINEERING

6th Semester

Branch: Mechanical Engg.

S K Panigrahi
Lect Mechanical
ITT, Choudwar

2

Source of Energy

2.1 INTRODUCTION

As we know that, energy is required for doing any type of work in life. It is required for cooking, heating, cooling, lighting etc., in our homes. It is required to run our machines and other mechanical equipment in industries. It is also required for transportation. In fact almost all our developmental activities are directly or indirectly dependent upon the energy conservation.

Energy is measured by multiplying the force applied on an object (measured in Newton) with the distance moved by that object (measured in metre). The unit of energy, therefore, is Newton metre (N.m) called Joule (J). Its higher units are kJ, MJ, GJ.

here,

kJ = kilo Joule = 1000 J = 0.948 BTU = 0.2427 kcal

MJ = Mega Joule = Million Joule = 10^6 J

GJ = Giga Joule = 1000 MJ = 1 MkJ = 10^9 Joule

= 23.884 kg of oil equivalent (kgoe)

= 0.1634 barrel of crude oil equipment

2.2 CLASSIFICATION OF SOURCES OF ENERGY

2.2.1 Primary and Secondary Sources

(1) Primary energy sources are those which provide a net supply of energy. Coal, oil, uranium etc., are examples of this type. The energy required to obtain these fuels is much less than what they can produce by combustion or nuclear reaction. Their energy yield ratio is very high. The energy yield ratio is the ratio of energy fed back by the material to the energy received from the environment. Though these (primary fuels) contribute considerably to the energy supply, their supply is limited and hence it becomes very essential to use them sparingly.

Secondary energy sources do not produce net energy, though, these are necessary for the economy. Intensive agriculture is an example where, in terms of energy, the yield is less than the input. These sources require higher investment in terms of energy.

Coal, natural gas, oil and nuclear energy using breeder rector are net energy yields and are primary sources of energy. Example of secondary sources are: solar energy, wind, water energy, etc. It may be necessary in future to develop the secondary sources like, solar, wind, tide wave, geothermal and ocean thermal sources.

Examples of primary and secondary fuels are given in the following table.

Table 2.2: Primary and secondary fuels.

Type of fuel	*Primary fuel*	*Secondary fuels*	
		Manufactured	*By-product*
Solid	Wood coal	Coke Charcoal Briquettes Pulverised coal	Wood refuse biogas Coke breeze,
Liquid	Petroleum	Diesel Petrol Kerosene Alcohol Fuel oil Naphtha	Tar Pitch Benzol Paper pulp mill waste
Gaseous	Natural gas	Producer gas Water gas Coal gas Oil gas Gobar gas Butane Propane Acetylene Hydrogen LPG	Blast furnace gas Coke oven gas Oil refinery gas Sewage gas.

2.2.2 Commercial and Non-commercial Sources

The *commercial sources* include fossil fuel (coal, oil and natural gas), hydro electric power and nuclear power, while the *non-commercial sources* include wood, animal waste and agricultural wastes. In developed countries, most of the energy requirements are met from commercial sources, while in developing countries the use of commercial and non-commercial sources is almost equal. World's energy supply comes mainly from fossil fuels. The dependence of developing countries on non-commercial sources is likely to continue till it is replaced by other alternative sources of energy.

2.2.3 Major and Minor Sources of Energy

Major sources of energy are:

(*i*) Fossil fuel *i.e.*, solid fuels (mainly coal including anthracite, bituminous, brown coals, lignits and peats), liquid and gaseous fuels including petroleum and its derivatives, and natural gas.

(*ii*) Water power *i.e.*, energy stored in water

(*iii*) Energy of nuclear fission.

Minor sources of energy include: sun, wind, tides in the sea, geothermal, ocean thermal electric conversion, MHD, fuel cells, thermo-ironic converters, thermo-electric generators etc.

2.2.4 Renewable and Non-renewable Sources of Energy

The renewable energy sources are those which are perpetually available in nature (such as heat of the sun, power of the winds, power of tidal sea waves, thermal energy of the oceans, heat present in the earth's crust etc); or are generated continuously in nature (such as the potential energy of the stored water; and energy of the biomass such as wood, animal dung, agricultural waste, kitchen waste and leafly materials, and organic municipal solid wastes).

The *non-renewable energy sources* are those energy sources which have accumulated in nature over a long span of time (millions of years) and cannot be replensished even in hundreds of years. Therefore, these are the sources which are finite in quantity and cannot be reproduced. They are sure to be exhausted after some years. These energy sources include: fossil fuels such as coal, petroleum and natural gas and nuclear fuels like uranium-235.

In the age of development, mainly through industrialisation, and due to urbanisation these sources of energy are mainly used in the form of electrical energy. The electricity is the only form of energy which is easy to produce, easy to transport, easy to use and easy to control. Energy in the form of electricity is therefore used for transmission and distribution. As electricity is the main form of energy being used, its consumption per capita is considered as the index of living standard of people of a place or country. Electricity in bulk quantities is produced in power plants by using various sources of energy.

Thermal power plants generate about 80% of the total electricity produced in the world. Fossil fuels, *viz.* coal, fuel oil and natural gas are the energy source, and steam is the working fluid. Hydraulic power plants, besides generating power, also cater for irrigation, flood control, fisheries, afforestation, navigation, etc.

2.2.5 Classification According to use of Fuel

Depending upon the usage, fuels are classified as domestic fuel, illuminating fuel, industrial fuel, rocket fuel, etc.

Domestic fuels supply heat for cooking and space heating. Illuminating fuels, eg. Kerosene provide light in darkness. Industrial fuels supply heat for process heating, steam and electricity generation, etc. Rocket fuels *e.g.*, hydrazine are used for producing enormous thrust for the propulsion of rocket.

2.2.6 Chemical fuels and nuclear fuels

As per this classification, the fuels which generate heat by combustion are called 'chemical fuels' and the fuels which generate heat by nuclear fission or fusion are known 'nuclear fuels'.

Nuclear fuels are of two types: (*i*) fossil fuel, which release heat by its fission by neutron bombardment e.g., uranium-233, uranium-235, plutonium-239. (*ii*) There are some nuclear fuels *e.g.* thorium-232 and uranium-238 which cannot be fissioned directly, but they can be converted into fissile material e.g., uranium-233 and plutonium-239 respectively. Such nuclear fuels are called fertile fuels.

1.2 CLASSIFICATION OF POWER PLANTS

As we know that a power plant is an assembly of equipment that produces and delivers mechanical and electrical energy. Power plant may be classified as under:

1. On the basis of service rendered:
    - (*i*) Stationary
    - (*ii*) Mobile.
2. On the basis of source of energy
    - (*i*) Steam power plants:
        - (*a*) condensing
        - (*b*) non-condensing.
    - (*ii*) Diesel power plants
    - (*iii*) Hydro-electric power plants
    - (*iv*) Nuclear power plants
    - (*v*) Gas turbine power plants
    - (*vi*) Tidal power plants
    - (*vii*) Solar power plants
    - (*viii*) Wind power plants
    - (*ix*) Geo-thermal power plants
    - (*x*) MHD power plants.
3. On the basis of location:
    - (*i*) Central power station
    - (*ii*) Isolated power station.
4. On the basis of nature of load:
    - (*i*) Peak load plant
    - (*ii*) Base load plant
    - (*iii*) Stand-by plant
5. On the basis of conventional or non-conventional sources:
    - (*i*) Conventional sources
        - (*a*) Thermal power plants (Steam, Diesel, and Gas)
        - (*b*) Hydro power plants
        - (*c*) Nuclear power plants
    - (*ii*) Non-conventional sources
        - (*a*) Tidal
        - (*b*) Solar
        - (*c*) Wind
        - (*d*) Geo-thermal
        - (*e*) M.H.D.
6. On the basis of Renewable or Non-renewable energy resources
    - (*i*) Renewable energy resources
        - (*a*) Hydro
        - (*b*) Solar
        - (*c*) Wind
        - (*d*) Tidal
        - (*e*) Ocean thermal
        - (*f*) Geothermal
    - (*ii*) Non-Renewable energy resources
        - (*a*) Coal
        - (*b*) Oil
        - (*c*) Gas
        - (*d*) Nuclear

Steam Power Plants use solid fuel, *i.e.*, coal in pulverised form in burners or furnace oil

Steam Power Plants use solid fuel, *i.e.*, coal in pulverised form in burners or furnace oil in oil burners. Steam is produced in the boiler and is expanded in steam turbines which are coupled to electric generators, generating electricity. The plant may contain several other mountings, accessories and heat reclaiming devices such as economisers, air preheaters, feed water heaters etc.

Hydro-electric Power Plants have water stored behind a dam at an elevation. The potential energy of water is converted to mechanical energy allowing the water to flow through water turbines. Generators are coupled with water turbines to generate electric power.

Diesel Power Plants use diesel engines as the prime movers to drive the electric generators for producing electric power. The main equipments of these plants are diesel engines, engine starting and engine super-charging equipment, oil handling, oil cooling system and water cooling system.

Gas Turbine Power Plants use gas turbine as prime mover, where working medium is a gas. The air compressed in a compressor is then supplied in combustion chamber, where hot gas are generated, which are expanded in gas turbine to produce mechanical power. Gas turbine is connected to alternator to generate electric power. The main equipment in these power plants are: gas turbine, the starting device, fuel control system, compressor, reheater, regenerator, oil cooler etc. The heat from the gas turbine exhaust may be used for providing the heat for generating steam in a waste heat boiler.

Nuclear Power Plants employ nuclear reactor for generation of heat energy. These power plants are similar to steam power plants, in which boiler is replaced by nuclear reactor.

Solar Energy comes to the earth from the sun. Solar energy is converted to electricity by photovoltaic **solar** cells.

Wind energy may be used in remote areas where laying of transmission lines may be expensive. The wind energy is converted into electrical energy by the use of wind turbines. This is used in places where wind velocity is considerably high.

Geothermal energy. Approximately 94% of the earth is in molten state, and only the thin outer shell is a solidified rock ranging in thickness from 75 to 150 km. The temperature at the centre of the earth is around 3000°C, while temperature at the juncture between the magma body and the crust approaches 1200°C. Geothermal energy is the energy which lies embedded within the earth. The fact that volcanic action take place in many places on the earth supports these theories. The steam and hot water comes naturally to the surface of the earth in some locations of the earth. For large scale use bore holes are normally sunk with depths upto 1000 M, releasing steam and water at temperature upto 200 or 300°C, and pressures upto 30 kg/cm^2. The steam coming out of the ground is used to generate electricity.

Magneto-hydro-dynamic (MHD) power generation. Faraday's law of electromagnetic induction states that when a conductor and magnetic field move relative to each other, an electric voltage is induced in the conductor. The conductor may be a solid, liquid or gas. In an MHD generator, the hot ionised gas replaces the copper windings of an alternator. The hot partially ionised and compressed gas is expanded in a duct, and forced through a strong magnetic field, electrical potential is generated in the gas. Electrodes placed on the side of the duct pick up potential generated in the gas. In this manner, direct current is obtained which can be converted to AC with the help of an inverter.

Tidal power. The tides in the sea and oceans of earth are the result of the universal gravitational forces of sun and moon on the earth. This results a periodic rise and fall in levels of sea water, which is in rhythm with the daily cycle of rising and setting of sun and moon. In a period of 24 hrs and 50 min, there are two high tides and two low tides. The water at the time of high tide is at a high level and can be let into a basin for storing there at a high level. This water is then allowed to come back into the sea during the low tide through the turbine, thus producing the power. The difference of head between high level in the basin and low level in the sea is utilised for running the turbine. In India following three sites for possible generation of power through tides have been selected. These are:

(*i*) Gulf of Cambay,
(*ii*) Gulf of Kutch, and
(*iii*) Sunderban area in the West Bengal.

Ocean Thermal Energy Conversion (OTEC). This is an indirect method of utilizing solar energy. A large amount of solar energy is collected and stored in tropical oceans. The surface of water acts as the collector of solar heat, while the upper layer of the sea constitutes infinite heat storage reservoir. Thus the heat contained in the oceans could be converted into electricity by utilizing the fact that temperature difference between the warm surface waters of the tropical oceans and the colder water in the depths is 20-25 K. The surface water which is at higher temperature could be used to some low boiling organic fluid, the vapours of which would run a heat engine. The exit vapour would be condensed by pumping cold water from the deeper regions.

OTEC systems work on a closed Rankine cycle and use low boiling organic fluids like ammonia, propane etc. The warm surface water is used for supplying the heat input in boiler while the cold water brought up from the depths is used for extracting the heat in the condenser.

1.1 IMPORTANCE OF ELECTRICAL ENERGY & POWER SECTOR DEVELOPMENT

Energy, in its simplest form, is known as ability to do work. The energy, when converted into electricity, is called 'power'. Energy is required for doing any type of work in life. It is required for cooking, heating, cooling, lighting etc. in our homes; to run our machines and other mechanical equipment in industries; to run our locomotives for transportation. Since almost all our developmental activities are directly or indirectly dependent upon the energy consumption, the amount of consumption of energy by a nation is usually considered as an index of its development.

Power development is one of the key infrastructure elements for the economic growth of the country. Power projects are indispensable as they are inexorably linked to the Indian economy, besides their need for the welfare of the growing masses. The development of the power sector in the country since independence has been predominantly through thermal, hydropower, nuclear and non-conventional source.

Since energy plays a fundamental role in the economic development of any country, we have to ensure availability of energy that is affordable, reliable and secure in order to sustain modern ways of living. Giant strides have been made in the Indian electricity sector in past five decades. The generating capacity, which was a meagre 1362 MW at the time of independence, has presently increased to 1,40,302 MW (as on 31.12.2007).

The annual generation has grown from about 5 billion units to about 811 billion units for the year 2010-11. During this period of times, per capita consumption has increased from a mere 15 Kwh to 632 Kwh.

The demand for electricity has overtaken the supply and the gap has been increasing. The rapid economic growth for which the country is poised in the wake of economic reforms and globalization, would lead to further increased demand growth. To meet the increasing power requirement, it is necessary to speedily develop and utilize all types of energy resources at our command. Since 1990s India's Gross Domestic Product (GDP) has been growing quite fast and it is forecast that it will continue to do so in the future.

STEAM GENERATING UNIT

LAYOUT OF MODERN STEAM POWER PLANT

→ It comprises the following four circuits.

1. Coal and ash circuit
2. Air and gas circuit
3. Feed water and steam flow circuit
4. Cooling water circuit.

1. Coal and ash circuit : coal arrives at the storage yard and ~~after necessary handling~~ passes to the furnaces through fuel feeding device.

→ Ash resulting from combustion of coal collects at the back of the boiler and is removed to the ash storage yard through ash handling equipment.

2. Air and gas circuit : Air is taken in from atmosphere through the action of a forced or induced draught fan and passes on to the furnace through the air preheater, where it has been heated by the heat of flue gases which pass to the chimney via the preheater.

→ The flue gases after passing around boiler tubes and superheater tubes in the furnace pass through a dust catching device or precipitator, then through the economiser and finally through the air preheater before being exhausted to the atmosphere.

3. Feed water and steam flow circuit :

→ The condensate leaving the condenser is first heated in a closed feed water heater through extracted steam from the lowest pressure extraction point of the turbine. It then passes through the de aerator and a few more water heaters before going into the boiler through economiser.

→ In the boiler drum and tubes, water circulates due to the difference between the density of water in the lower temp. and the higher temp. sections of the boiler.

→ wet steam from the drum is further heated up in the superheater before being supplied to the prime mover.

→ After expanding in high pressure turbine steam is taken to the reheat boiler and brought to the original dryness or superheat before being passed to the low pressure turbine. from there it is exhausted through the condenser into the hotwell.

→ The condensate is heated up in the feed heater using the steam tapped (bled steam) from different points of the turbine.

→ A part of steam and water is lost while passing through different components and this is compensated by supplying additional feed water.

4. Cooling water circuit: The cooling water supply to the condenser helps in maintaining a low pressure in it. The water may be taken from a natural source such as river, lake or sea.

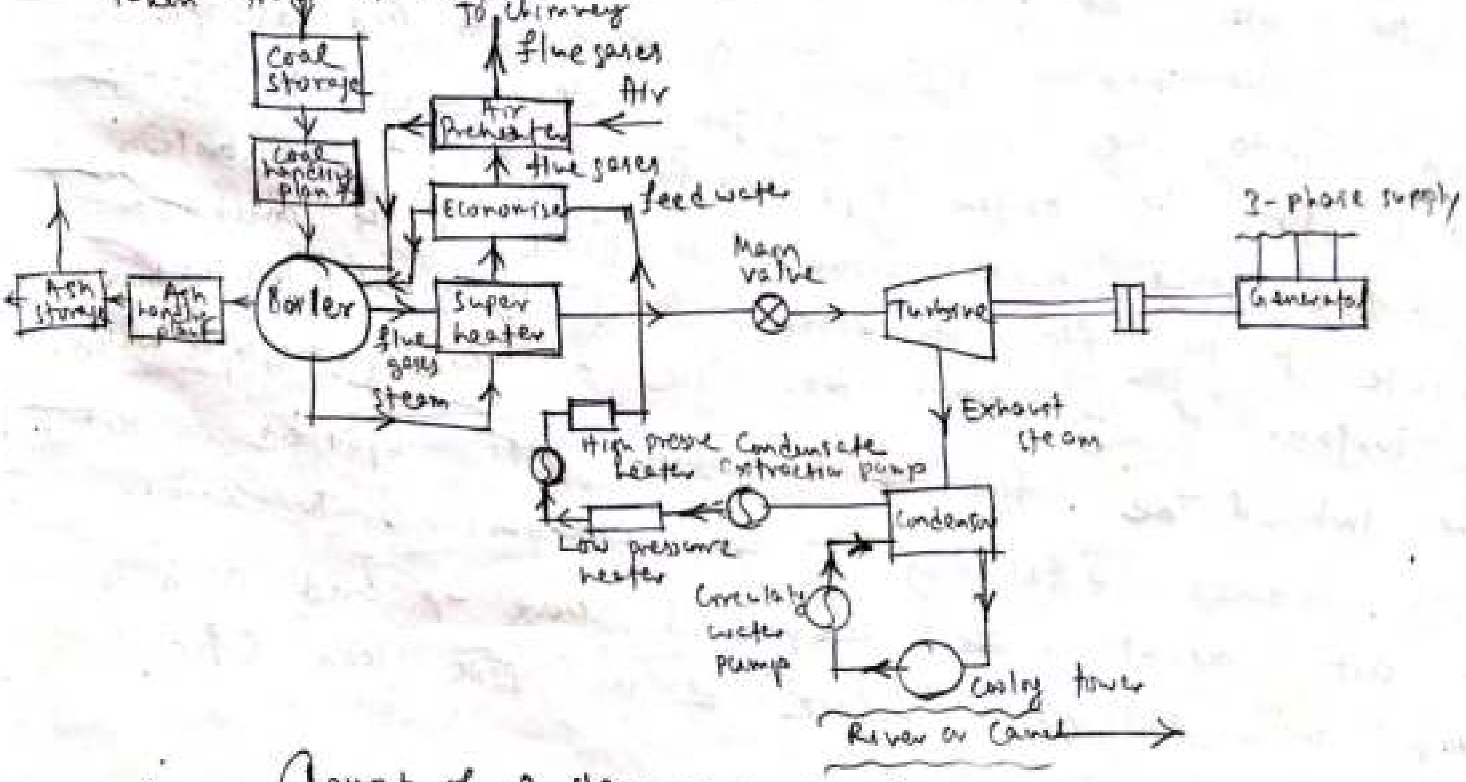

(Layout of a steam power plant)

MODULE-II STEAM POWER PLANT

Steam power cycle:

→ A power cycle continuously converts heat (energy released by the burning of fuel) into work (shaft work), in which a working fluid repeatedly performs a succession of processes.

→ Heat is transferred to water in the boiler from an external source (furnace, where fuel is continuously burnt) to raise steam, the high pressure, high temperature steam leaving the boiler expands in the turbine to produce shaft work, the steam leaving the ~~condensor~~ the turbine condenses into water in the condensor (where cooling water circulates), rejecting heat and then the water is pumped back to the boiler.

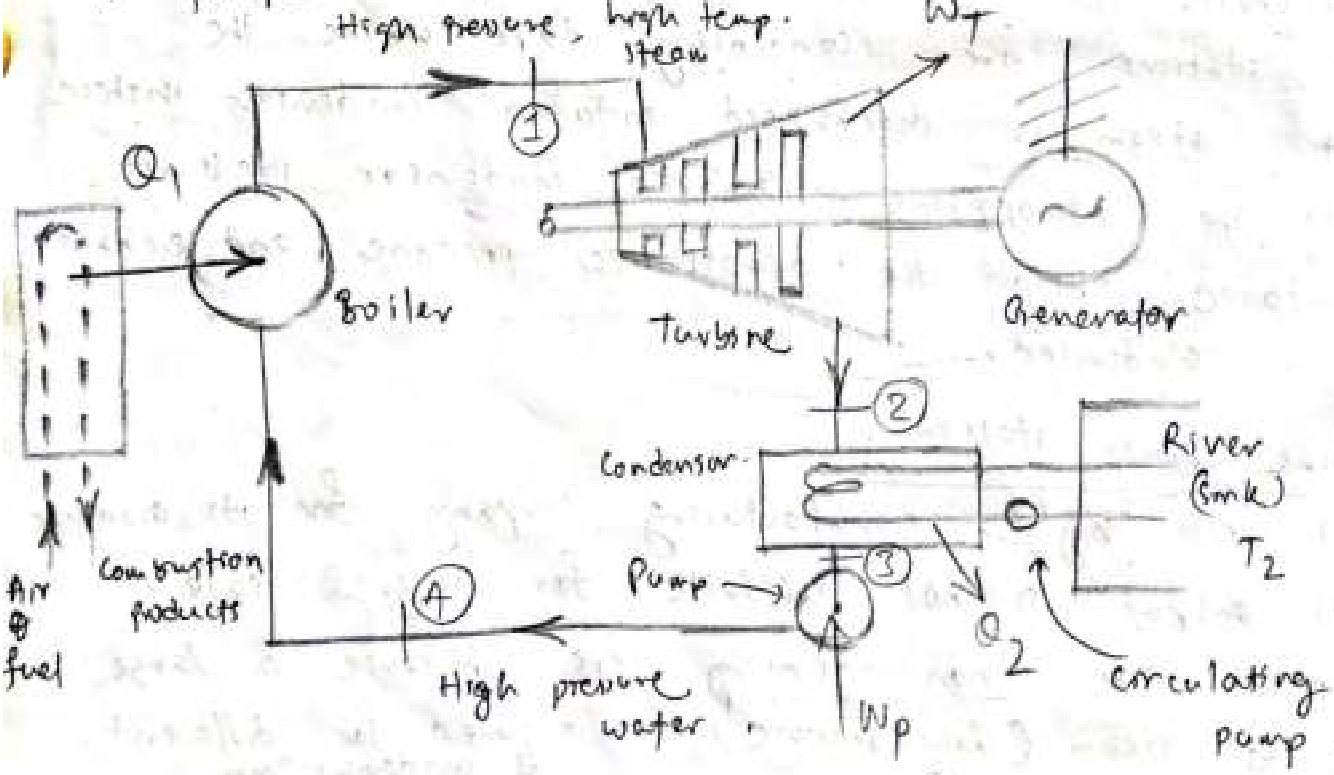

(Simple steam power plant)

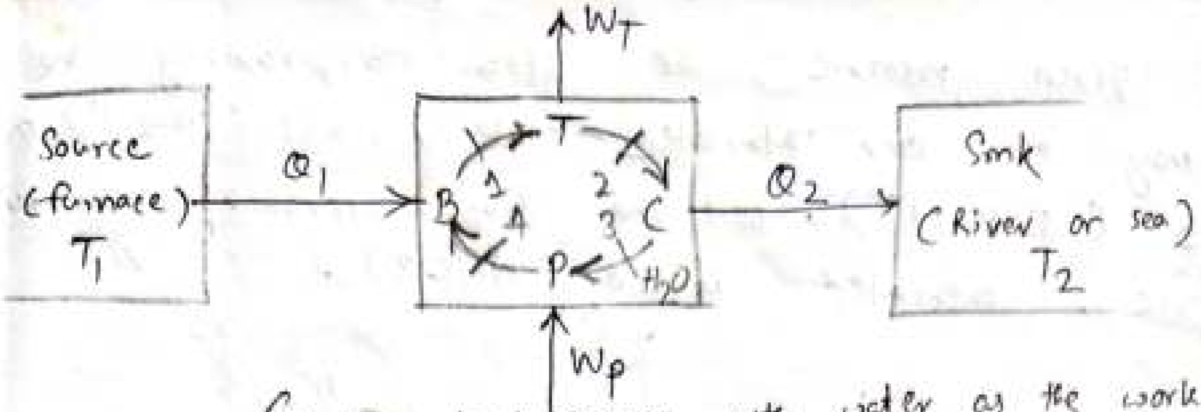

(Cyclic heat engine with water as the working fluid)

→ figure shows the cyclic heat engine operating on the vapour power cycle, where the working substance water, follows along the B-T-C-P path, interacting externally as shown and converting net heat input to net work output.

$$\sum_{cycle} Q_{net} = \sum_{cycle} W_{net}$$

$$\Rightarrow Q_1 - Q_2 = W_T - W_P$$

$$\eta_{cycle} = \frac{W_{net}}{Q_1} = \frac{W_T - W_P}{Q_1} = \frac{Q_1 - Q_2}{Q_1} = 1 - \frac{Q_2}{Q_1}$$

RANKINE CYCLE

→ for each process in the vapour power cycle, it is possible to assume a hypothetical or ideal process which represents the basic intended operation.

→ for the steam boiler, this would be reversible constant pressure heating process of water to form steam, for the turbine the ideal process would be a reversible adiabatic expansion of steam, for the condenser it would be reversible constant pressure heat rejection as the steam condenses till it becomes saturated liquid. and for the pump the ideal process would be reversible adiabatic compression of this liquid

→ when all these four processes are ideal, the cycle is an ideal cycle, called a Rankine cycle.

→ For any given pressure, the steam approaching the turbine may be dry saturated (state 1), wet (state 1') or superheated (state 1''), but the fluid approaching the pump is, in each case, saturated liquid (state 3).

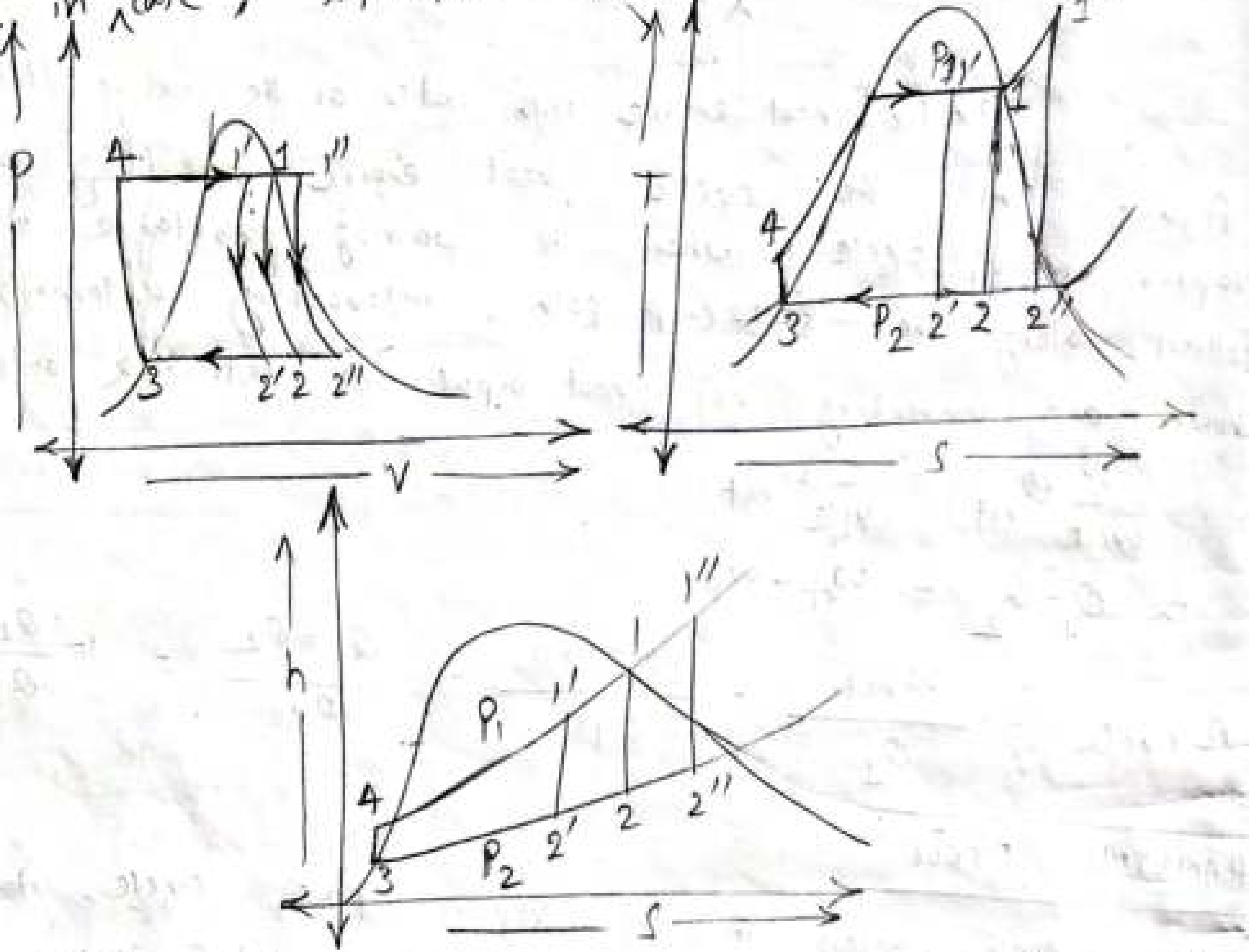

(Rankine cycle on P-V, T-S and h-S diagrams)

→ Rankine cycle is assumed to be carried out in a steady flow operation. Applying S.F.E.E. to each of the processes on the basis of unit mass of fluid and neglecting changes in K.E. and P.E., the work & heat quantities can be evaluated.

→ S.F.E.E. for the boiler (control volume) gives

$$h_4 + Q_1 = h_1 \Rightarrow Q_1 = h_1 - h_4$$

→ S.F.E.E. for the turbine as C.V. gives

$$h_1 = W_T + h_2 \Rightarrow W_T = h_1 - h_2$$

→ S.F.E.E. for the condenser is

$$h_2 - Q_2 = h_3 \Rightarrow Q_2 = h_2 - h_3$$

→ S.F.E.E. for the pump, gives

$h_3 = h_4 - W_p \Rightarrow W_p = h_4 - h_3$

→ efficiency of the rankine cycle is given by

$$\eta = \frac{W_{net}}{Q_1} = \frac{W_T - W_P}{Q_1} = \frac{(h_1-h_2)-(h_4-h_3)}{(h_1-h_4)}$$

→ $h = u + pv \Rightarrow dh = du + p\cdot dv + v\cdot dp = dQ + v\cdot dp$

$\Rightarrow dQ = dh - v\cdot dp$

$\Rightarrow T\cdot ds = dh - v\cdot dp$

→ The pump handles liquid water which is incompressible i.e. its density or specific volume undergoes little change with an increase in pressure.

→ for reversible adiabatic compression, $ds = 0$

so $dh = v\cdot dp$.

→ Since change in specific volume is negligible

$\Delta h = v\,\Delta p \Rightarrow h_4 - h_3 = v_3 (P_1 - P_2) \times 10^5$ J/kg.

v is in m³/kg and p is in bar

→ Usually, the pump work is quite small compared to the turbine work and is sometimes neglected. Then $h_4 = h_3$

then cycle efficiency becomes $\eta \cong \frac{h_1-h_2}{h_1-h_4}$

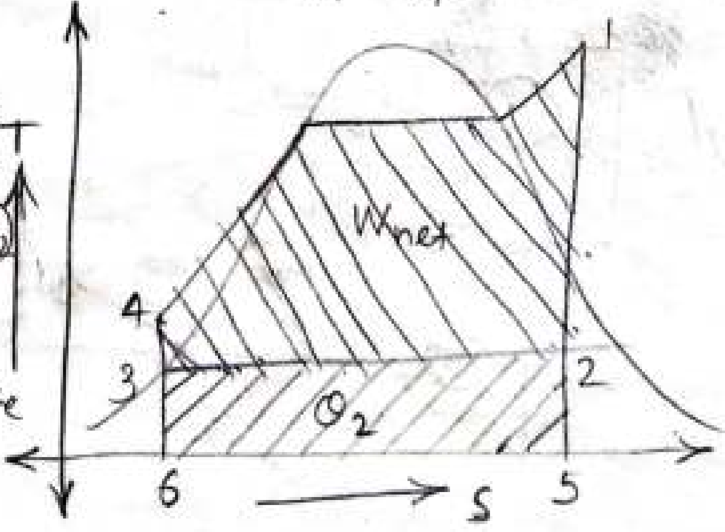

→ Thus Q_1 is proportional to area 1564, Q_2 is proportional to area 2563 and $W_{net} (= Q_1 - Q_2)$

→ $W_{net} = Q_1 - Q_2$ is proportional to area 1234 enclosed by the cycle.

→ The capacity of a steam plant is often expressed in terms of steam rate which is defined as the rate of steam flow (kg/h) required to produce unit shaft output. (1 kW).

→ Therefore, steam rate $= \frac{1}{W_T - W_p} \frac{kg}{kJ} \times 1\ kJ/sec$

$$= \frac{1}{W_T - W_p} \frac{kg}{sec\ kW} = \frac{3600}{W_T - W_p} \frac{kg}{kW\ hr}$$

→ cycle efficiency is sometimes expressed alternatively as heat rate which is the rate of heat input (Q_1) required to produce unit work output (1 kW)

$$\text{Heat rate} = \frac{3600\ Q_1}{W_T - W_p} = \frac{3600}{\eta_{cycle}} \frac{kJ}{kW\ hr}$$

$$\text{Work ratio} = \frac{W_{net}}{W_T}$$

REHEAT CYCLE

Problem:

→ Steam at 20 bar, 360°C is expanded in a steam turbine to 0.08 bar. It then enters a condensor, where it is condensed to saturated liquid water. The pump feeds back the water into the boiler.

ⓐ Assuming ideal processes find per kg of steam the net work and the cycle efficiency.

ⓑ If the turbine and the pump have each 80% efficiency, find the % reduction in the net work and cycle efficiency?

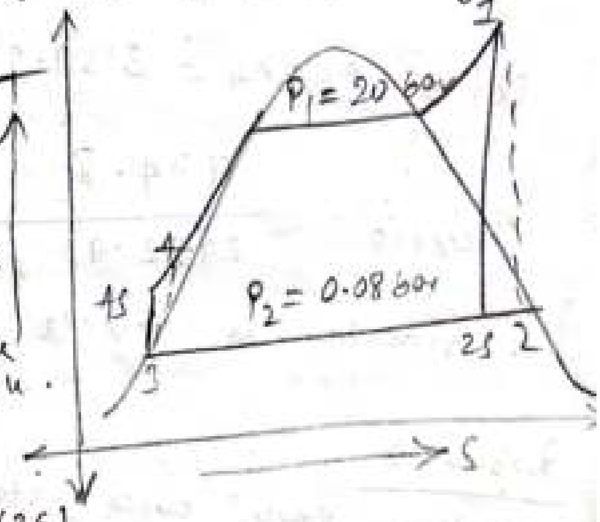

Ans at 20 bar and 360°C

$h_1 = 3159.3$ kJ/kg, $s_1 = 6.9917$ kJ/kgK

$h_3 = 173.88$ kJ/kg, $s_3 = 0.5926$ kJ/kgK $= s_{fP_2}$

$h_{fg(P_2)} = 2403.1$ kJ/kg, $s_{gP_2} = 8.2287$ kJ/kgK
$s_{fgP_2} = 7.6361$ kJ/kgK.

$s_1 = s_{2s} = 6.9917 = s_{fP_2} + x_{2s}\, s_{fgP_2}$

$= 0.5926 + x_{2s} \times 7.6361$

$\Rightarrow x_{2s} = \dfrac{6.9917 - .5926}{7.6361} = 0.838$

$h_{2s} = h_{fP_2} + x_{2s}\, h_{fgP_2} = 173.88 + 0.838 \times 2403.1$

$= 2187.68$ kJ/kg

ⓐ $W_T = h_1 - h_{2s} = 3159.3 - 2187.68 = 971.62$ kJ/kg,

$v_{fP_2} = 0.001008$ m³/kg

$W_P = h_{4s} - h_3 = v_{fP_2}(P_1 - P_2) = 0.001008 \frac{m^3}{kg} \times 19.92 \times 100 \frac{kN}{m^2}$

$= 2.008$ kJ/kg

$h_{4s} = 175.89$ kJ/kg

$Q_1 = h_1 - h_{4s} = 3159.3 - 175.89 = 2983.41$ kJ/kg

$\eta_{cycle} = \dfrac{W_{net}}{Q_1} = \dfrac{W_T - W_P}{Q_1} = \dfrac{971.62 - 2.008}{2983.41} = 0.325$ or 32.5%.

ⓑ $\eta_p = 80\%$, $\eta_T = 80\%$

$$w_p = \frac{2.008}{0.8} = 2.51 \text{ kJ/kg}$$

$$w_T = 0.8 \times 971.62 = 777.3 \text{ kJ/kg}$$

$$w_{net} = w_T - w_p = 774.8 \text{ kJ/kg}$$

% reduction in work output $= \dfrac{969.61 - 774.8}{969.61} \times 100 = 20.1\%$

$$h_4 = h_3 + w_p = 173.88 + 2.51 = 176.39 \text{ kJ/kg}$$

$$Q_1 = h_1 - h_4 = 3159.3 - 176.39 = 2982.91 \text{ kJ/kg}$$

$$\eta_{cycle} = \frac{774.8}{2982.91} = 0.2597 \text{ or } 25.97\%$$

% reduction in cycle efficiency $= \dfrac{(0.325 - 0.2597)}{0.325} \times 100 = 20.1\%$

Ans

3.2 CARNOT CYCLE

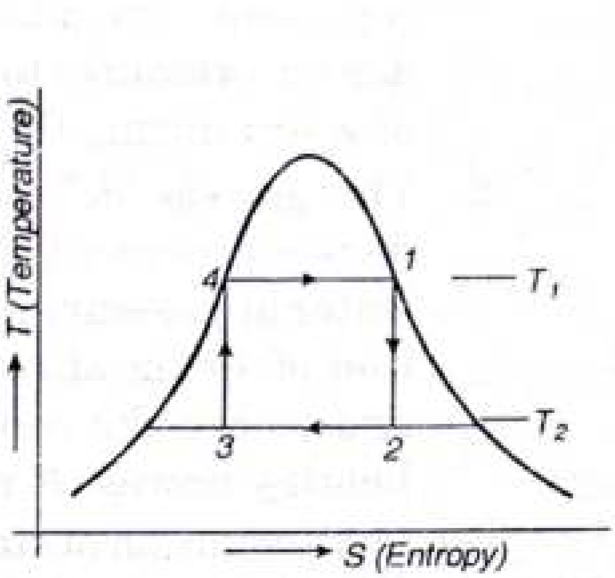

Fig. 3.3. Carnot cycle.

The Carnot cycle is an ideal but non-practical cycle giving maximum possible thermal efficiency for a cycle operating on selected maximum and minimum temperature ranges.

Thermal efficiency of Carnot cycle is given by

$$\eta_{Carnot} = \frac{\text{Work output}}{\text{Heat received}} = \eta_{\max}$$

$$= \frac{T_1 - T_2}{T_1}$$

where,

T_1 = Temperature of the heat source (higher temperature)
T_2 = Temperature of the receiver (lower temperature)

Being ideal cycle, the efficiency of the Carnot cycle is maximum and is treated as a standard of comparision for all other cycles.

7.17 BOILER ACCESSORIES

Boiler accessories are auxiliary parts required for the smooth function of the boiler and to increase the overall efficiency of the boiler. As huge quantity of fuel is used in thermal power plant and very large quantity of heat is carried by the exhaust gases. The heat carried by the exhaust gases is about 25%. In the present age of costly fuel, it is necessary to conserve the fuel by utilising the wasted energy to the atmosphere. This is done in all modern power plants by incorporating economiser and air preheater.

The common equipments used in thermal power plants to increase the thermal efficiency are economisers, and air preheaters. The heat carried with the flue gases is partly recovered in air preheaters and economisers and reduces the fuel supplied to the boiler. The preheating of air with the gases increases the combustion efficiency and reduces the fuel consumption. The other important accessories are superheaters, and reheaters.

7.18 ECONOMISERS

The economiser is a feed water heater deriving heat from the flue gases discharged from the boiler.

There are steaming economisers in which the water is raised to the boiling point and partially (10 – 20%) evaporates and non-steaming economisers in which the temperature of water is below the boiling point by 20 – 30°C. The advantage of an economiser are as follows:

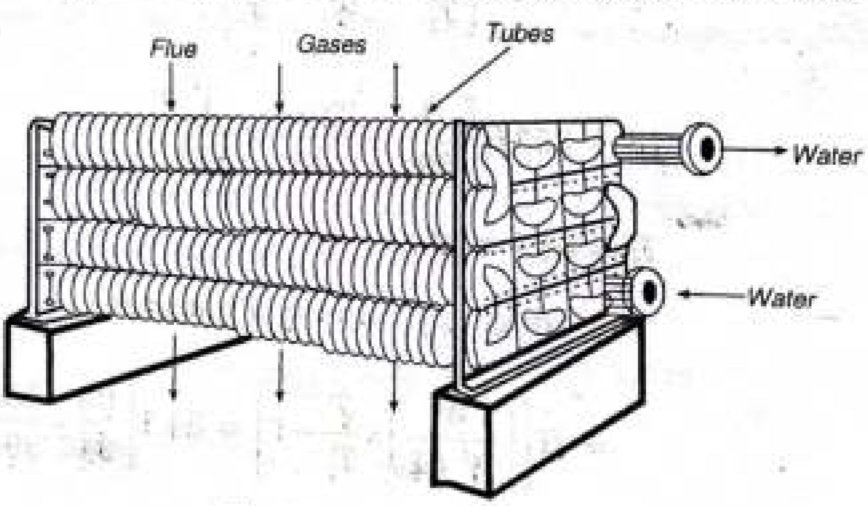

Fig. 7.36. Iron tube economiser.

(i) It reduces the losses of heat with the flue gases.

(ii) It reduces the consumption of fuel.

(iii) It improves the efficiency of the boiler installation by increasing the steaming capacity.

(iv) It enhances the life of boiler.

Economiser may have iron or steel tubes. Smooth or ribbed. Fig. 7.36 shows a general view of an iron economiser.

Flue gases flow over the tubes.

Fig. 3.37 shows an economiser, consisting of series of steel tubes through which the feed water flow. The combustion gases pass over the tubes and transfer some of their

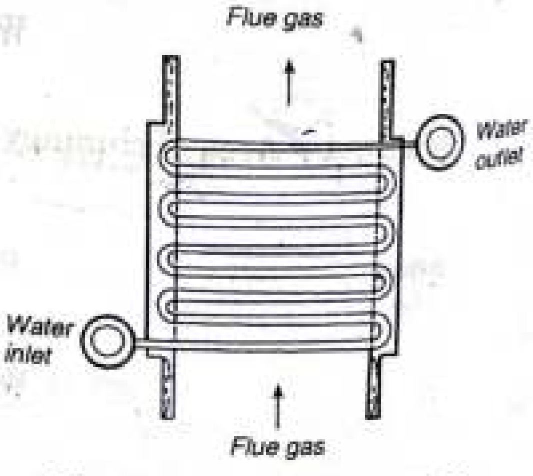

Fig. 7.37. Steel tube economiser

heat to the feed water. The boiler efficiency rises by about 1% for each 10°F rise in feed water temperature. Economisers may be parallel-flow or counter-flow, when the gas flow and water-flow are in the same direction economisers are called parallel-flow whereas in counter-flow economiser the gas flow and water-flow are in the opposite direction. Installation of an economiser depends on its initial cost, type of boiler and nature of feed water used.

Fig. 7.38 shows by-pass arrangement which enables to isolate or include the economiser in the path of the flue gases.

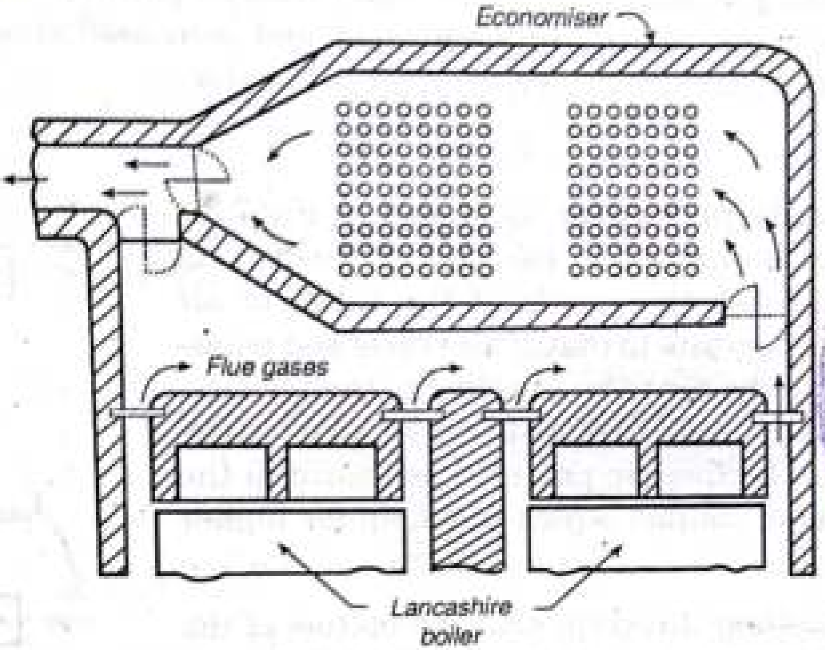

Fig. 7.38. By-pass arrangement for economiser.

From the above it is seen that an economiser is a heat exchanger which raises the temperature of the feed water leaving the highest feed water heater to about the saturation temperature corresponding to the boiler pressure. This is done by the hot flue gases leaving the last superheater or reheater at a temperature varying from 370°C to 540°C. Since by utilising the exhaust flue gases in heating feed water, higher efficiency and better economy were achieved, hence, the heat exchanger is known as "economiser". Modern economisers are often designed to allow some boiling of the feedwater in the outlet sections, and are therefore, termed as "steaming economisers".

For an economiser, following *design requirements* should be satisfied:

1. It must be able to extract maximum possible heat from exhaust gases, with minimum heat transfer surface.
2. The pressure loss should be minimum to reduce the running expenses of ID fans.
3. There must be free circulation of water around the economiser to prevent the over-heating and boiling during the period when there is no feed-flow during early pressure rising stages.

7.19 AIR PREHEATERS

The heat carried with the flue gases coming out of economiser is further utilised for preheating the air before supplying to the combustion chamber. The air heater is not only considered in terms of boiler efficiency in modern power plant, but also as necessary equipment for supply of hot air for drying the coal in pulverised fuel system to facilitate grinding and satisfactory combustion of fuel in the furnace.

Thus, with the application of air preheater, it is possible to cool the exhaust gases in the heating of air supplied for the combustion of fuel. The use of hot air makes the combustion process more efficient by making it more stable and reducing the energy losses due to incomplete combustion and unburnt carbon.

It consists of plates or tubes with hot gases on one side and air on the other. It preheats the air to be supplied to the furnace. Preheated air accelerates the combustion and facilitates the burning of coal. Degree of preheating depends on the type of fuel, type of fuel burning equipment and the rating at which the boiler and furnace operated. The principal benefits of preheating the air are increased thermal efficiency and increased steam capacity per square metre of boiler surface. There are two types of air preheater.

1. Tabular type
2. Plate type

A tabular type air preheater as shown in Fig.7.39. After leaving the boiler or economiser the gaseous products of combustion travel through the inside of the tubes of air preheater in a direction opposite to that of air travel and transfer some of their heat to the air to be supplied to the furnace. Thus, the air gets initially heated before being supplied to the furnace. The horizontal baffles are provided as shown in the figure to increase time of contact which will help for higher heat transfer.

The gases reverse their direction near the bottom of the air heater, and a soot hopper is fitted to the bottom of air heater casing to collect soot.

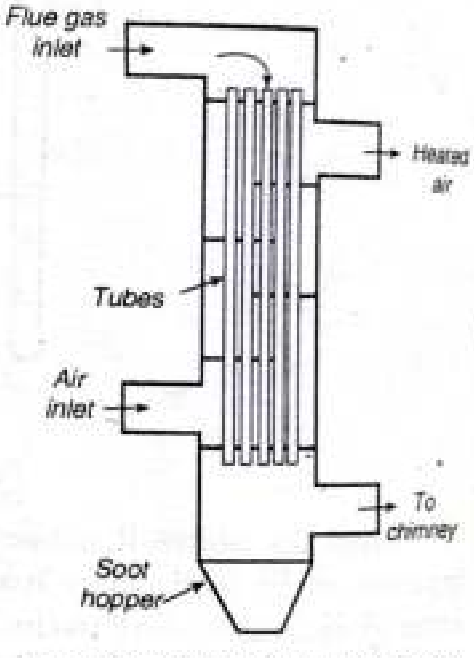

Fig. 7.39. Tabular type air preheater.

In **plate type air preheater** the air absorbs heat from the hot gases being swept through the heater at high velocity on the opposite side of a plate. It consists of rectangular flat plates spaced from 1.5 to 2.5 cm apart leaving alternate air and gas passages. This type of air-preheater is not used in modern installations, as it is more expensive both as to initial cost and maintenance cost and also in efficiency as compared with tubular air preheater.

Finally the products of combustion leave the stack (chimney) to make their passage to the atmosphere. It is desirable that the temperature of the gases leaving the stack should be kept as low as possible to keep the heat loss to the stack at minimum.

By installing economiser and air preheater less fuel is required per unit mass of steam raised and boiler efficiency is increased. The justifiable cost of economiser and air preheater depends upon the gain in boiler efficiency.

Air preheater should be used where a study of costs indicates that some money can be saved or some beneficial action on combustion can be obtained by its use. Some factors that need to be taken into account in examining a case for justification of air preheat system are as follows:

(i) Improvement in combustion efficiency.
(ii) Cost of the equipment and estimated maintenance cost.
(iii) Cost of extra draft.

7.21 SUPER HEATERS

The steam produced in the boiler is nearly saturated. This steam as such should not be used in the turbine because the dryness fraction of the steam leaving boiler will be low. This results in the presence of moisture which causes corrosion of turbine blades, etc. To raise the temperature of steam super heater is used. It consists of several tube circuits in parallel with one or more return bends connected between headers. Super heater supplies steam at constant temperature at different loads. The use of super heated steam increases turbine efficiency.

The function of the superheater in the thermal power plant is to remove the last traces of moisture from the saturated steam coming out of boiler and to increase its temperature sufficiently above the saturation temperature. The superheating raises overall cycle efficiency as well as avoids too much condensation in the last stages of the turbine, which avoids the blade erosion. The heat of combustion gases from furnace is utilised for the removal of moisture from steam and to superheat the steam. In modern utility high pressure boilers, more than 40% of the total heat absorbed in the generation of steam takes place in the superheaters, therefore, large surface area is required to be provided for superheating of steam. Superheaters and reheaters are made of 20 to 50 mm outer diameter.

There are three types of super-heaters:

1. Convective super heater
2. Radiant super heater
3. Combination of the two

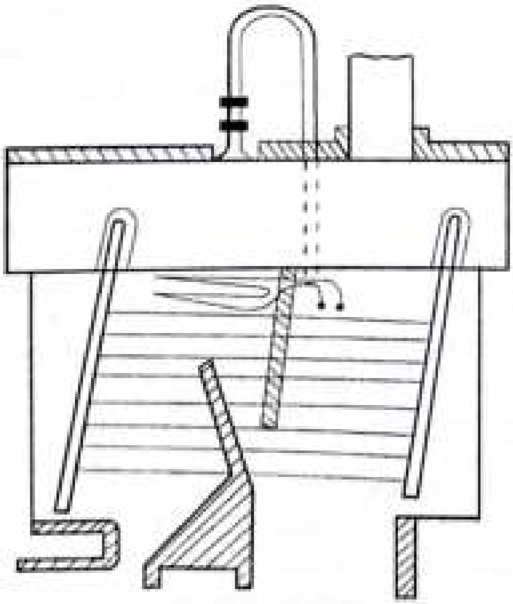

Fig. 7.41. Over deck superheater.

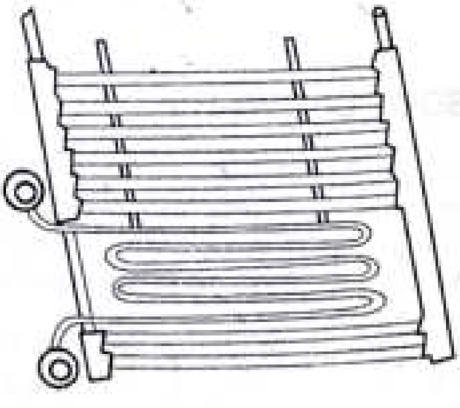

Fig. 7.42. Inter deck superheater.

Convective super heater makes use of heat in the gases entirely by convective by locating them in the convective zone of the furnace, usually ahead of the economiser, whereas a **radiant super heater** is placed in the radiant zone of the furnace near the water wall and receive heat from the burning fuel through radiation process.

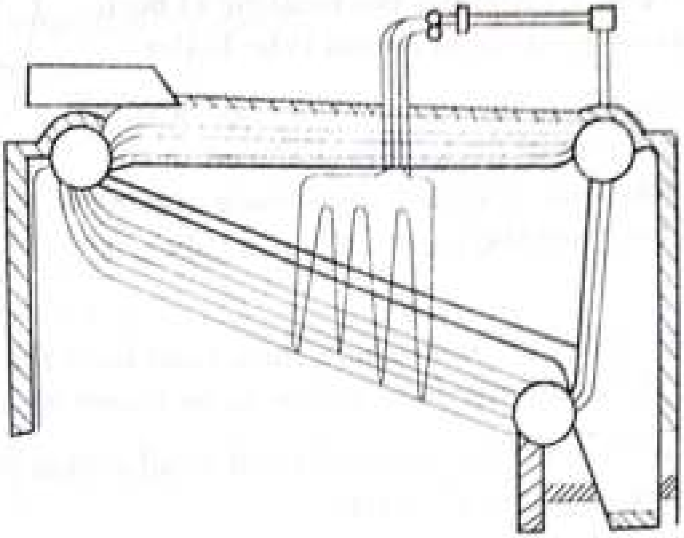

Fig. 7.43. Inter tube superheater.

The final temperature of steam depends upon the gas flow rate, quantity of gas flow and the temperature of the gases leaving the super heated section. The flue gas temperature should be nearly 175°C higher than the temperature of super heated steam. Material used for super-heater tubes should have high temperature strength and high resistance to oxidation. Special steel alloys such a chromium molybdenum alloy is used for tubes of super-heater for modern high pressure boilers.

According to location the super-heaters are classified as follow:

(i) Over deck
(ii) Inter deck
(iii) Inter tube
(iv) Inter bank.

Fig. 7.41 shows over deck location of a super heater and inter deck location is shown in Fig. 7.42. Inter tubes and inter bank location of super heater is shown in Fig. 7.43 and Fig. 7.44 respectively.

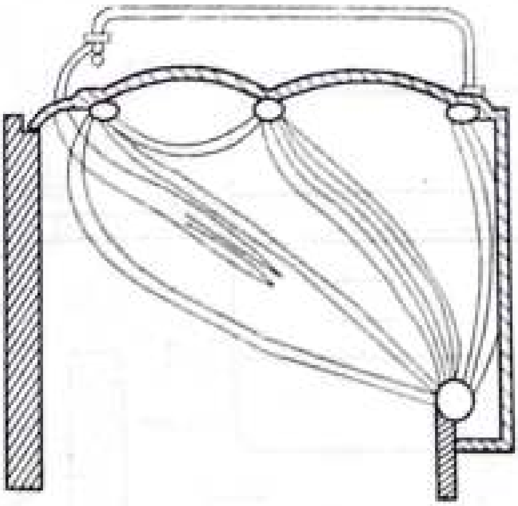

Fig. 7.44. Inter bank superheater.

Over deck and inter deck super heaters are essentially convective super heater. The heat transfer conditions in a super heater vary with load. When load is decreased the gas mass flow decreases proportionately and in a convective superheater fewer degrees of super heat are obtained whereas in a radiant superheat steam receives more heat than at higher loads. A radiant superheater has falling characteristic with increased steam output of boiler. Modern boilers using high pressures use combination of convective and radiant superheater. Fig. 7.45 shows the locating of both convective and radiant super-heaters in a bent tube boiler.

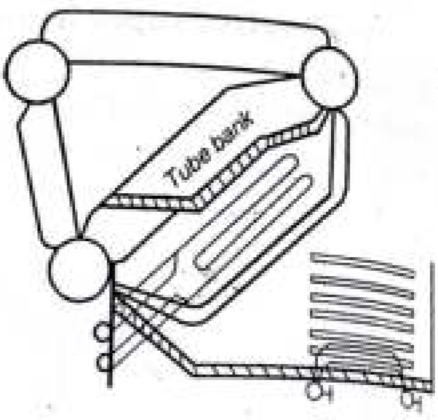

Fig. 7.45.

If superheater is located in the spaces over the water tubes of the boiler, it is called over deck. If it is placed in the space within the tube deck, this is called inter deck superheater, and when located between the banks of water tubes, it is known as inter bank.

Superheaters may be horizontal or pendant, the former have the advantage of being drained easily, while in the latter the condensed steam has to be blown off.

Depending on the direction of flows of steam and combustion products, superheaters may be partial flow, counter-flow or mixed flow type.

Radiant superheater. If the heating surface of a radiant superheater in the drum-type boiler is not large, it can be located on the furnace roof. Otherwise, it can occupy part of the vertical walls of the furnace. In once-through boilers, the radiant superheater usually occupies the furnace roof, the upper and medium radiation sections, the walls of the horizontal flue duct.

7.21.1. Sugden Superheater

Fig. 7.46 shows sugden's super heater used in a Lancashire boiler. This super heater uses two steel headers to which are attached solid drawn 'U' tubes of steel. These tubes are arranged

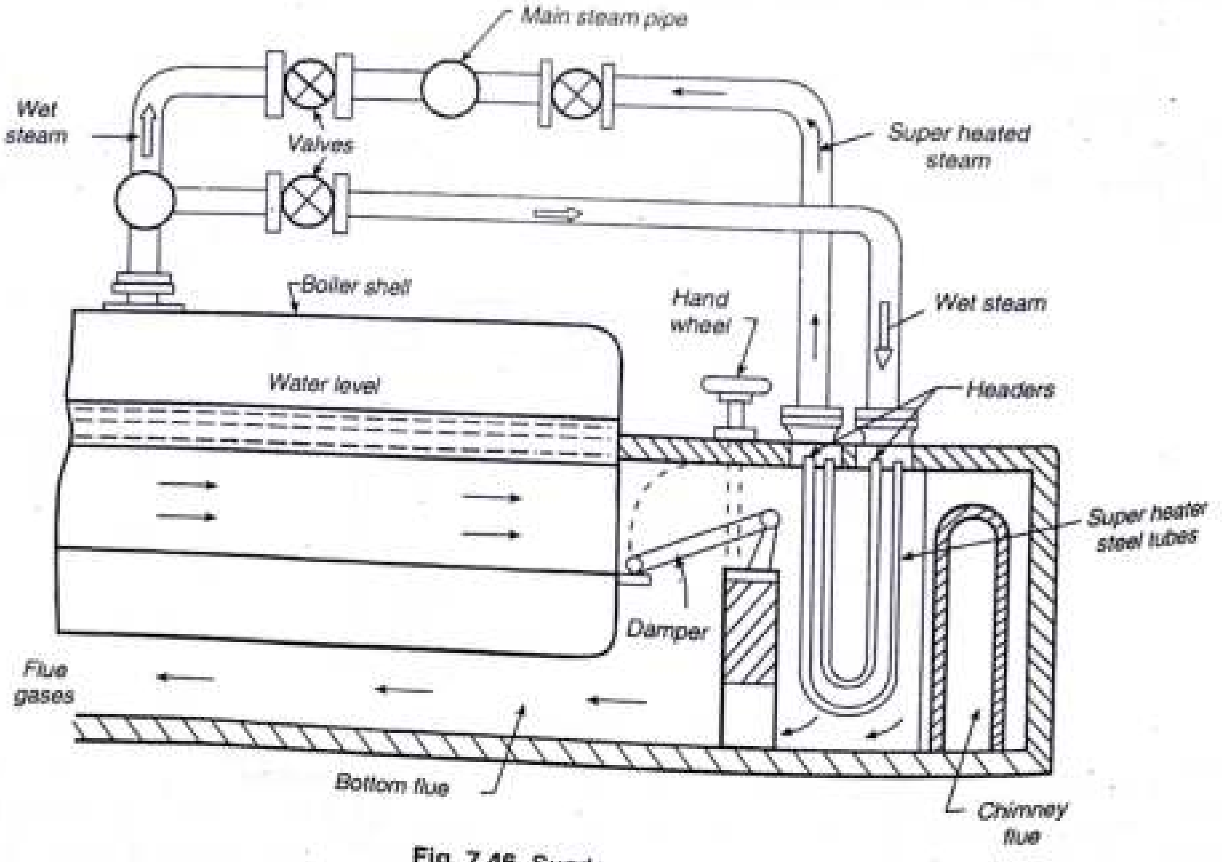

Fig. 7.46. Sugden superheater.

in groups of four and one pair of the headers generally carries ten of these groups or total of forty tubes. The steam from the boiler enters and leaves the headers as shown by the arrows. It shows how the steam pipes may be arranged so as to pass the steam through the superheater or direct to the main steam pipe.

Advantages of Super-heated Steam

Super-heated steam is vapour whose temperature has been increased above that of its boiling point at that pressure.

The various advantages of using super-heated steam are as follows:

(i) Super-heated steam has an increased capacity to work due to a higher heat contact. Therefore, an economy in steam consumption in steam turbines and steam engine achieved.

(ii) Super-heating raises the over all efficiency of the plant. The temperature of the super-heated steam being higher it gives a higher thermal efficiency when used for working a prime mover.

(iii) Super-heating of steam avoids the erosion of turbine blades in the last stages of expansion of steam. In order to avoid blade erosion it is desirable to limit the moisture content 10 to 12% in the exhaust of the steam turbines.

7.12.2. Super-heat Control

It is desirable that there should be a close control over the final temperature of steam over a reasonably wide range of load.

The various methods employed to achieve this are as follow:

1. **Use of Desuperheater.** To control the temperature of steam a desuperheater (attemperator) is used. In the desuperheater (Fig. 7.47) some quantity of cold water is injected into or around the pipe carrying the steam. This causes the evaporation of water so injected and thus the temperature of steam is lowered.
2. **Use of Tilting Burners.** Tilting burners in the furnace are used to regulate the temperature of gases leaving the furnace (Fig. 7.48)

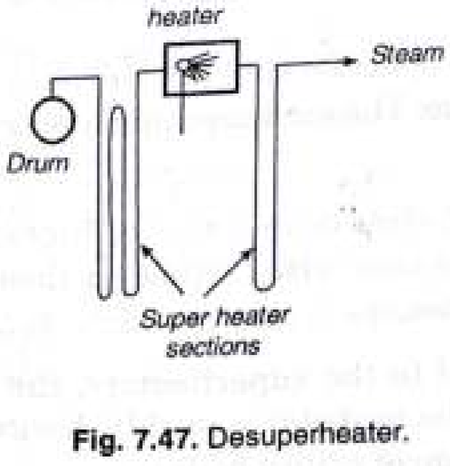

Fig. 7.47. Desuperheater.

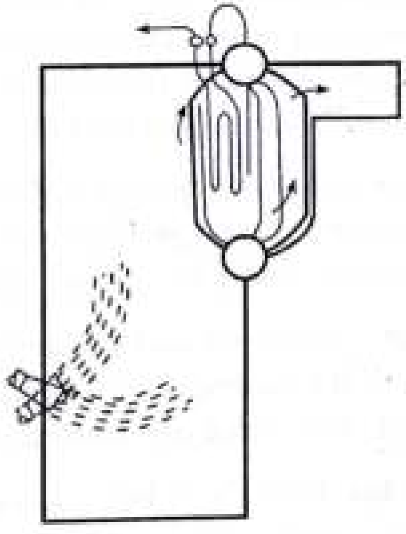

Fig. 7.48. Tilting Burners.

3. **Use of Dampers.** Dampers are provided to control the direction and flow of hot combustion gases in order to vary the quantity of gas passing through the superheater.
4. **Use of Auxiliary Burners.** Auxiliary burners (Fig. 7.49) can be used to control degree of super-heat.
5. **Twin Furnace.** Arrangement (Fig.7.50) may be used for the control of super-heating temperature.

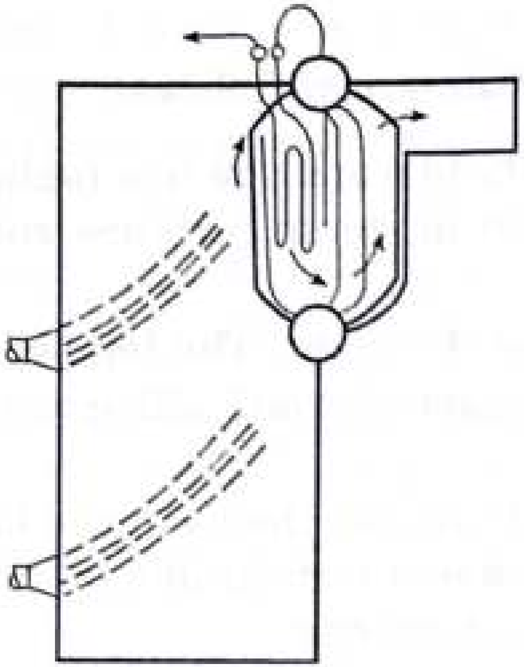

Fig. 7.49. Auxiliary Burners.

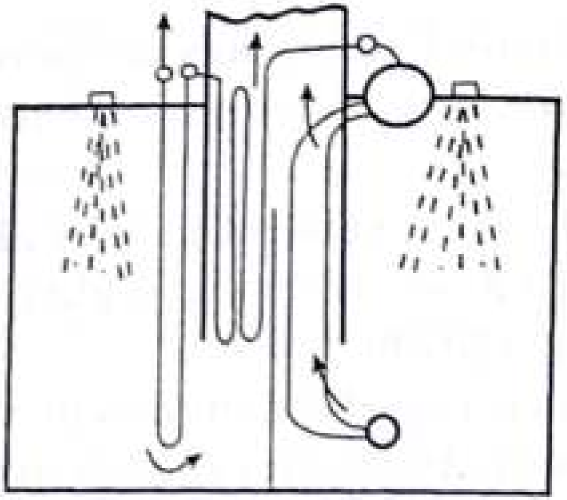

Fig. 7.50. Twin furnace.

7.8 BOILER MOUNTINGS

Different fittings and devices necessary for the operation and safety of a boiler are known as boiler mountings. The safety valve, water level indicator and the fusible plug are the devices used for the safety of the boiler. The pressure gauge, feed check valve, blow off cock and steam stop valve fall under the category of fittings and are essential for the operation of the boiler. The functions of various boiler mountings are given here under:

1. **Pressure gauge.** A pressure gauge is used to measure the pressure of the steam inside the boiler.

2. **Water level indicator.** This indicates the water level inside the boiler. The water in the boiler should not fall below a particular level otherwise the boiler will be overheated and the tubes may burn out. Usually two water level indicators are filled in front of the boiler.
3. **Safety valve.** The function of safety valve is to prevent an increase of steam pressure in the boiler above the safe design pressure. When the pressure increases above design pressure, the valve opens and discharges the steam to the atmosphere, and when the pressure falls just below design pressure, the valve closes automatically. A spring loaded safety valve is commonly used.
4. **Fusible plug.** When the temperature of the boiler shell increases above a particular level, the fusible plug, which is mounted over the grate, melts and forms an opening. The high pressure steam pushes the remaining water through this hole on the grate and extinguish the fire. Thus, it prevents the overheating of the boiler shell and tubes when the water level in the boiler falls below a predetermined level.

   Under normal water level conditions in the boiler, this plug is covered with water which keeps the temperature of the fusible metal below its melting point. When the water level in the boiler falls and the plug is uncovered, the fusible metal quickly melts and the plug drops out.
5. **Blow-off cock.** Since the water supplied to the boiler always contains some impurities like mud, sand and salt, therefore on heating, these are deposited, at the bottom of the boiler. If these are not removed, they are accumulated at the bottom of the boiler and reduce its capacity and also heat transfer rates. In addition, the salt content go on increasing due to evaportation of water. When the blow-off cock, located at the bottom of the boiler is opened during the running of the boiler, the high pressure steam pushes the water and the collected material at the bottom is blown out. The blow-off cock is operated at regular interval of 5-6 hours of working for few minutes to keep the boiler clean.
6. **Steam stop valve.** This valve is fitted to the highest point of the boiler shell. The function of the stop valve is to regulate the flow of steam from the boiler to the prime mover as per requirement and shutoff the steam flow when not required.
7. **Feed check valve.** The function of the feed check valve is to allow the supply of water to the boiler at a higher pressure than boiler pressure continuously and to prevent the back flow of water from the boiler when the pump pressure is less than boiler pressure or when pump fails.
8. **Anti-priming pipe.** The water particles are thrown up into the steam when the boiler is generating steam rapidly. These water particles are carried away with the steam. This is known as **priming**. As wet steam is not desirable when it is used for power generation in prime mover, it is necessary to remove these water particles from the steam. Therefore, an anti-priming pipe, which is a simple device to prevent the carrying of water particles with the steam, is used. An anti-priming pipe, which is perforated by providing slots or holes, is fitted into the boiler shell in the steam space and the steam has to pass through this before coming out through the steam stop valve. When the steam enters into the anti-priming pipe through the perforated holes, the water particles are agglomorated and fall back into the boiler.
9. **Man-hole.** Man-holes, generally elliptical in shape, are provided in the boiler shell so that the people can get inside the shell for inspection and maintenance.

6.11.2 Electrostatic Precipitators (ESP)

It has two sets of electrodes, insulated from each other, that maintain an electrostatic field between them at high voltage (Fig. 6.28). The flue gases are made to pass between these two sets of electrodes. The electric field ionises the dust particles that pass through it attracting them to the electrode of opposite charge. The other electrode is maintained at a negative potential of 30,000 to 60,000 volts. The dust particles are removed from the collecting electrode by rapping the electrode periodically. The electrostatic precipitator is costly but has low maintenance cost and is frequently employed with pulverised coal fired power stations for its effectiveness on very fine ash particles and is superior to that of any other type.

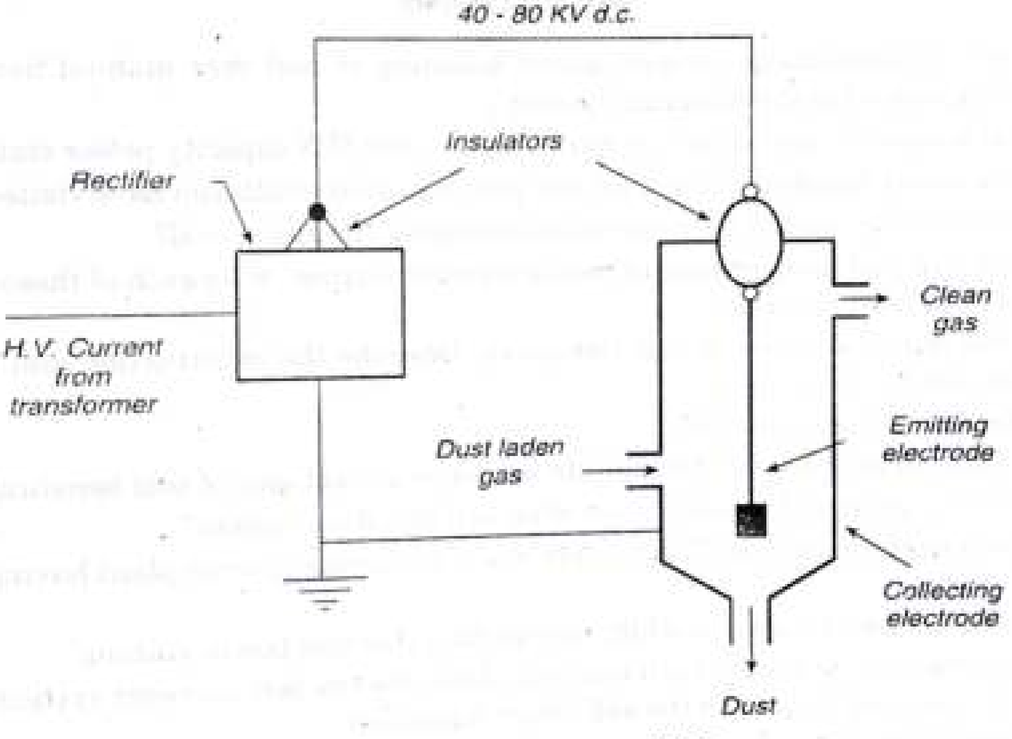

Fig. 6.28. Basic elements of ESP

An electrostatic precipitator has following basic components:

1. Source of high voltage
2. Ionizing and collecting electrodes
3. Dust removal mechanism
4. Shell to house the elements.

Gas Conditioning. Gas conditioning is the injection of small quantitities of SO_3 into the flue gas. This reduces electrical resistivity of fly ash and thus makes the dust more emenable to collection in the electrical precipitator. Thus, it increases the collection efficiency of the precipitator.

Major Thermal Power Stations

(Contd...)

4. Delhi	1. Badarpur	720 MW
5. Gujarat	1. Ahmedabad	217 MW
	2. Dhuvaran	254 MW
6. Haryana	1. Faridabad	800 MW
	2. Yamuna Nagar	840 MW
7. Karnataka	1. Manglore	320 MW
	2. Chhamraj Nagar	500 MW
	3. Hasan	200 MW
8. Kerala	1. Kayamkulum I	420 MW
	2. Kayamkulum II	400 MW
9. Madhya Pradesh	1. Vindhyachal	2260 MW
	2. Waiden	3000 MW
	3. Pench	840 MW
	4. Satpura	312 MW
	5. Bhilai	500 MW
10. Maharashtra	1. Trombay	337 MW
	2. Nasik	280 MW
	3. Chola	136 MW
	4. Khaperkheda	120 MW
11. Orisa	1. Talchar	4000 MW
	2. Rourkela	125 MW
12. Punjab	1. Bhatinda	640 MW
13. Rajasthan	1. Kota	400 MW
14. Tamil Nadu	1. Nayveli	240 MW
	2. Chennai	2000 MW
	3. Ennore	120 MW
15. Uttar Pradesh	1. Singrauli-I	2000 MW
	2. Singrauli-II	3000 MW
	3. Rihand	3000 MW
	4. Dadri	840 MW
	5. Unchahar	840 MW
	6. Hardua Ganj	210 MW
	7. Obra	200 MW
	8. Kanpur	155 MW
	9. Renukoot	125 MW
16. West Bengal	1. Farakka	3800 MW
	2. Durgapur	406 MW
	3. Kolkata	507 MW
	4. Bandel	330 MW

7.15 DRAUGHT

The rate of steam generation in a boiler depends upon the rate of fuel burned, which further depends upon the availability of fresh air supply to the combustion chamber. In order to maintain a continuous flow of fresh air into the combustion chamber, it is necessary to exhaust the products of combustion from the combustion chamber through the chimney into the atmosphere. The difference of pressure causing the flow of fresh air in and exhaust gases out is known as draught.

To move the air through the fuel bed and to produce a flow of hot gases through the boiler, economiser, preheater and chimney require a difference of pressure equal to that necessary to accelerate the burnt gases to their final velocity and to overcome the pressure losses. The draft can be obtained by use of chimney, fan, steam or air jet or combination of these.

The draft produced by the chimney is known as *natural draught*. The draft produced by mechanical equipment like fan is known as *mechanical draught*. The draught produced with the help of high pressure steam is known as *steam jet draught*.

Boiler draught is classified as given below:

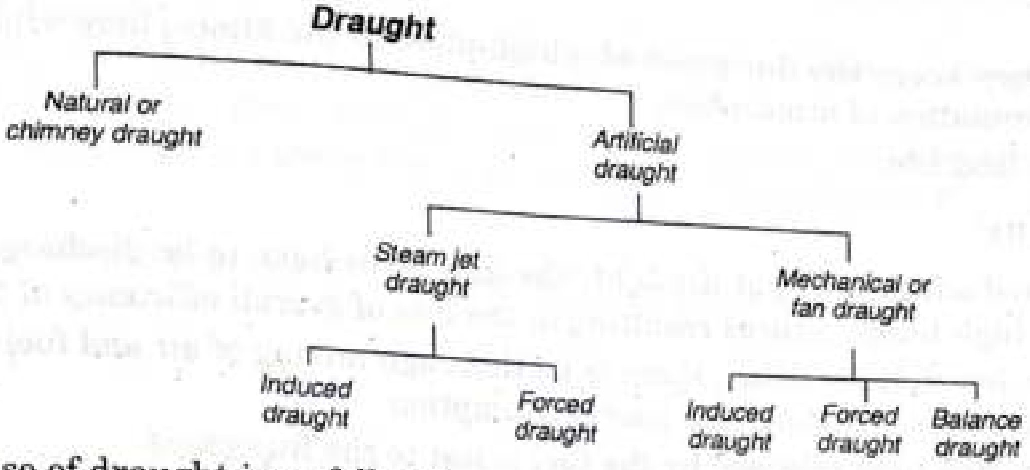

The purpose of draught is as follows:

- *(i)* To supply required amount of air to the furnace for the combustion of fuel. The amount of fuel that can be burnt per square foot of grate area depends upon the quantity of air circulated through fuel bed.
- *(ii)* To remove the gaseous products of combustion.

Draught is defined as the difference between absolute gas pressure at any point in a gas flow passage and the ambient (same elevation) atmospheric pressure. Draught is plus if $P_{atm} < P_{gas}$ and it is minus $P_{atm} > P_{gas}$. Draught is achieved by small pressure difference which causes the flow of air or gas to take place. It is measured in millimetre (mm) of water.

If only a chimney is used to create the necessary draught, the system is called natural draught system and if in addition to chimney a forced draught (F.D.) fan or an induced draught (I.D.), fan or both are used, the system is called mechanical draught system. Fans or chimneys produce positive pressure and is called available draught whereas fuel bed resistance, turbulence and friction in air ducts, gas breechings, chimney, etc., create negative pressure and is called the required draught.

7.15.1 Natural or Chimney draught

Natural draught system is used in boilers of smaller capacities. Natural draught is created by the difference in weight of a column of cold external air and that of a similar column of hot gases in the chimney. This system is dependent upon the height of chimney and average temperature of the gases in the chimney.

Natural draught is obtained by the use of chimney. A chimney is a verticle tubular structure of brick, masonary or steel built for the purpose of enclosing a column of gases to produce draught.

Now a days the chimney is not used for creating draught in steam power-plants as it has no flexibility, the total draught produced is insufficient for high generating capacity. By using chimney draught can be increased by allowing the flue gases to leave the combustion chamber at higher temperature and this reduces the overall efficiency of the power plant. The chimney is, therefore, used only to discharge the flue gases.

Advantages of Chimney Draught

1. It does not require any external power for producing the draught.
2. The capital investment is less than that of artificial draught. Maintenance cost is nil as there is no mechanical part.

3. Chimney keeps the flue gases at a high place in the atmosphere which prevents the contamination of atmosphere.
4. It has long life.

Limitations:

1. For producing sufficient draught, the flue gases have to be discharged at comparatively high temperatures resulting in the loss of overall efficiency of the plant.
2. Due to low velocity of air, there is no thorough mixing of air and fuel in the combustion chamber resulting into poor consumption.
3. Nearly 20% heat released by the fuel is lost to the flue gases.

7.15.2. Mechanical Draught (Artificial Draught)

In boilers of larger capacities, fans are employed to create the necessary draught in order to reduce the height of chimney, to obtain draught that is independent of weather conditions and to control the draught easily.

Mechanical draft may be induced, forced or balanced draft.

Induced draught (I.D.) system shown in Fig. 7.30(a) is created by chimney and fan located in the gas passage on the chimney side of the boiler. In this system gas movement is achieved as result of a vaccum.

The various pressures indicated are as follows:

P_1 = Inlet pressure of forced draft fan.
P_2 = Outlet pressure of forced draft fan.
P_3 = Pressure below grate.
P_4 = Pressure above the grate.
P_5 = Inlet pressure of induced draft fan.
P_6 = Outlet pressure of induced draft fan.

Induced draught is not as simple and direct as forced because fans used in induced draft system operate in gases of much higher temperature (nearly 500° — 900°F). This becomes more expensive.

The fan sucks in gas from the boiler side and discharges it to the chimney (stack).

The draught produced is independent of the temperature of the hot gases and, therefore, the gases may be discharged as cold as possible after recovering as much heat possible in air preheater and economiser.

In **forced draught** (F.D.) system Fig.7.30(b) the fan installed near the boiler base supplies the air at a pressure above that of atmosphere and delivers it through air duct to the furnace. Most high rating combustion equipment employs forced draught fans for supplying air to the furnace. Forced draught is used in under fed stokers carrying a thick fuel bed.

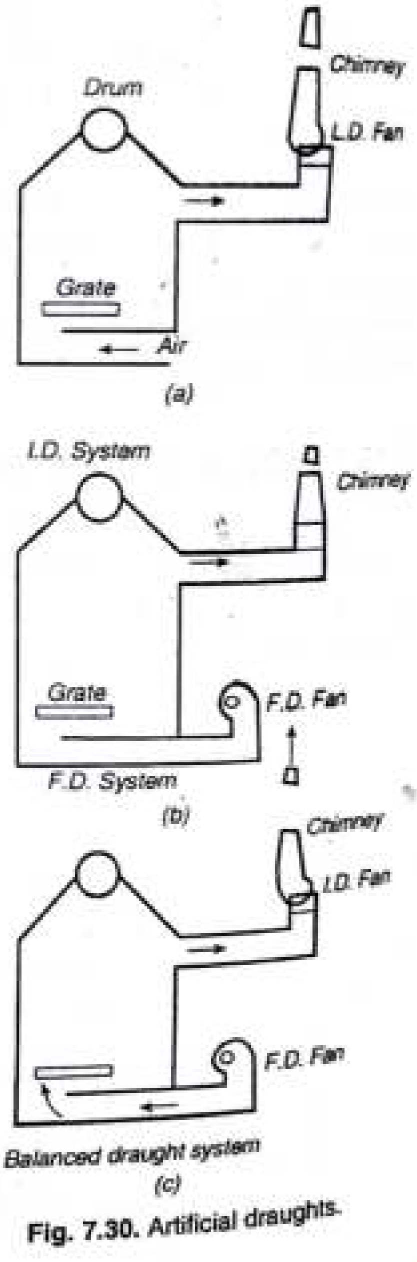

Fig. 7.30. Artificial draughts.

Balanced draught system is a combination of induced and forced draught systems. The forced draught fan forces the air through the fuel bed on to the top of grate and the induced draught fan sucks in gases from the boiler side and discharges them to the chimney. This system is used where pressure above fire is slightly below atmospheric, Fig.7.30(*c*) shows this system.

Fig. 7.31 shows the pressure distribution for the balanced system.

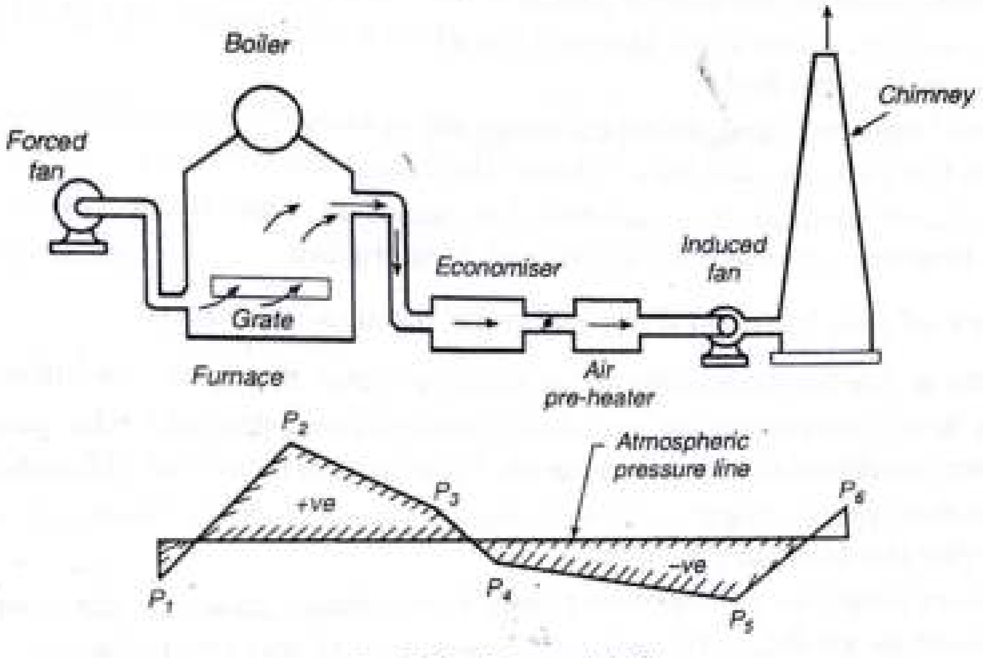

Fig. 7.31. Balanced draft.

Construction such as shielding or water cooling or water protect the bearings of fans. The I.D. fans handle gases laden with dust which causes wear of blades. In forced draught system the fans handle cool and clean air and the fan can be located where convenient. Balanced draft system is more efficient. In balanced draft system about 0.1 inch water vaccum is maintained over the fuel bed.

Multivane centrifugal fans are generally used for moving large volume of air and gases. The performance of a fan depends on the shapes of blades which are, in general, of three types:

1. Backward curves blades.
2. Forward curved blades.
3. Straight radial baldes.

Various types of blade forms are shown in Fig. 7.32.

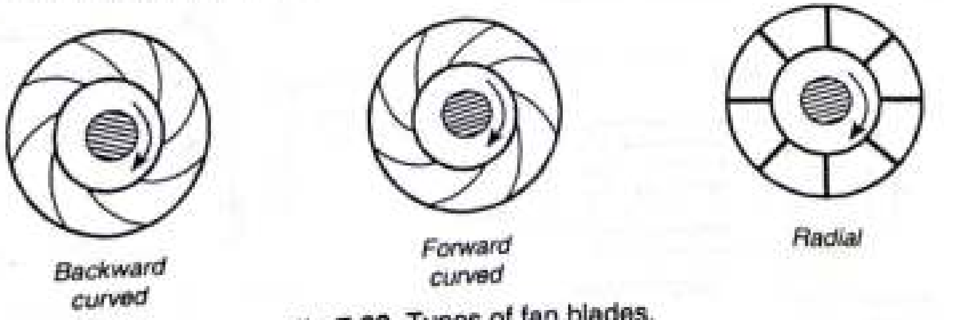

Fig.7.32. Types of fan blades.

The air leaving the tips of backward curved blades possesses low velocity. This makes them suitable for high rotor speed. Fans with backward curved blades are used in forced draught system. Forward and radial blades are used in induced draught fans.

Comparisons of forced and induced draughts

The forced draught system has the following advantages as compared to induced draught:

(*i*) The induced draught handles more volume of gases and at elevated temperature. Therefore, the size and power required for induced draught fan is more than forced fan.

(*ii*) Improved route of burning of fuel is achieved by using forced draught because there is more uniform flow of air through the grate and furnace and also the air penetrates better into the fire bed.

(*iii*) In case of induced draught when doors are opened for firing there will be rush of cold air into the furnace and this reduces the heat transmission.

(*iv*) The induced draught fan handles flue gases at high temperature and thus water cooled bearing are needed for induced draught fan.

Advantages of mechanical draught over natural draught

1. The rate of combustion is high due to the greater draught available.
2. Due to better mixing of air and fuel with artificial draught, the quantity of air supplied per kg of fuel burned is reduced. This also increase the efficiency of combustion.
3. The air flow can be regulated by changing the draught pressure as per requirement, *i.e.*, as per the load on the boiler.
4. Maximum heat can be recovered from the exhaust gases in the economiser and air-pre-heater as artificial draught is independent of gas temperature.
5. The height of the chimney can be reduced as the function of the chimney is now only to exhaust the gases high in the atmosphere.
6. The efficiency of the artificial draught is much higher as compared to natural draught.
7. It prevents the formation of soot and smoke as complete combustion is possible even with less percentage of excess air.

7.15.3. Steam Jet Draught

Steam jet draught may be induced or forced draught depending upon the location of steam jet producing the draught.

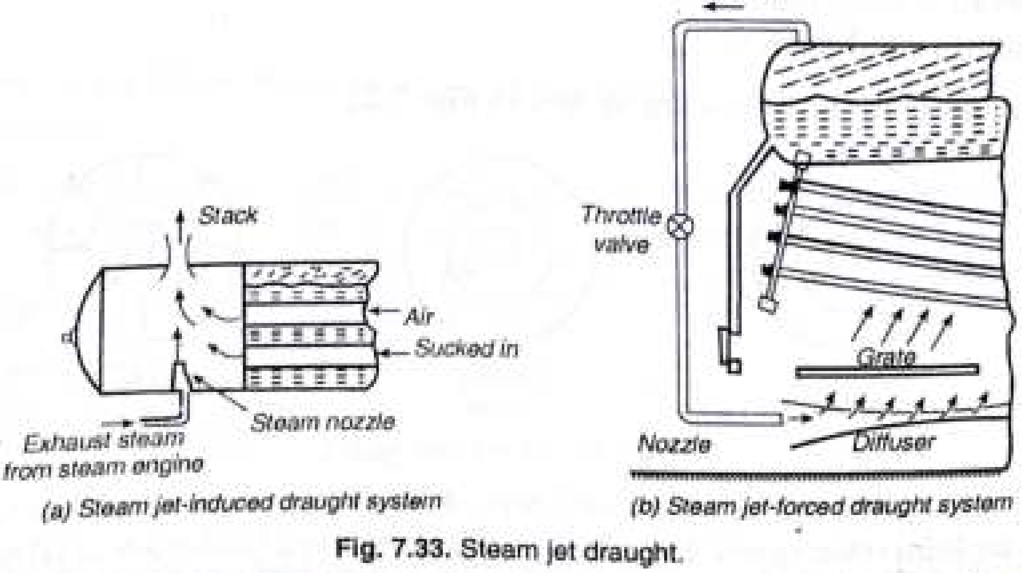

(a) Steam jet-induced draught system

(b) Steam jet-forced draught system

Fig. 7.33. Steam jet draught.

Induced draught produced by steam jet is shown in Fig. 7.33(*a*). This system is used in locomotive boilers. Exhaust steam from the engine enters the smoke box through a nozzle to create draught. The air is induced through the flues, the grate and ash pit to the smoke box.

Fig. 7.33 (b) shows a forced draught developed by steam jet. Steam from the boiler is passed through a throttle valve, throttle pressure being 1.5 to 2 kg/cm^2 gauge. Then the steam passes through a nozzle projecting in diffuser pipe. The steam comes out of nozzle with great velocity and drags a column of air along with it thus allowing the fresh air to enter. The mixture of steam and air possesses high kinetic energy and passes through the diffuser pipe. The kinetic energy gets converted into pressure energy and thus air is forced through the coal bed, furnace and flows to the chimney. Steam jet system is simple, requires less space and is economical. But it can be used only if steam at high pressure is available.

A—STEAM TURBINES

8.1 INTRODUCTION

A steam turbine is a prime mover which continuously converts the energy of high-pressure, high-temperature steam supplied by a boiler plant into shaft work with the low temperature steam exhausted to a condenser. The steam turbine is used predominantly as prime mover in all thermal power stations. Now a days, steam turbines upto 1000 MW capacity are being manufactured, and of capacity upto 1500 MW are planned for future.

The energy of the steam is converted into mechanical work in two steps:

1. The high-pressure, high-temperature steam first expands in nozzles and comes out at a high velocity.
2. The high velocity jets of steam coming out of the nozzles, impinge on the blades mounted on a wheel, get deflected by an angle and suffer a loss of momentum which is observed by the rotating wheel in producing torque.

A steam turbine is basically an assemblage of nozzles and blades. In steam turbines, steam is allowed to expand in stationary nozzles or blades, where it acquires a high velocity. These nozzles or blades are mounted on the periphery of a fixed disc called diaphragm. These high velocity steam jets are then directed onto a ring of blades fixed to the rim of wheel or rotor, which is free to revolve. The effective force of these jets, acting on these blades, rotate the wheel. A pair of blade rings consisting of a fixed ring of blades and a moving ring of blades is known as a turbine pair or stage.

8.2 ADVANTAGES OF STEAM TURBINES

The various advantages of steam turbines over steam engines are as follows:

(*i*) It requires less space.

(*ii*) Absence of various links such as piston, piston rod, cross head etc. make the mechanism simple. It is quiet and smooth in operation, and has very less vibrations and hence require lighter foundations.

(*iii*) Its over-load capacity is large.

(*iv*) It can be designed for much greater capacities as compared to steam engine. Steam turbines can be built in sizes ranging from a few horse power to over 500,000 horse power in single units.

(*v*) The internal lubrication is not required in steam turbine. This reduces the cost of lubrication.

(*vi*) In steam turbine the steam consumption does not increase with increase in years of service.

(*vii*) In steam turbine power is generated at uniform rate, therefore, flywheel is not needed.

(*viii*) It can be designed for much higher speed and greater range of speed.

(*ix*) The thermodynamic efficiency of steam turbine is higher. (35-40% as against 15-20% of steam engines).

(*x*) More work is obtained per kg of steam for the same initial steam conditions.

8.3 MAIN COMPONENTS

Main parts of a steam turbine are as under:

(*i*) A rotor on the circumference of which a series of blades or buckets are attached. To a great extent the performance of the turbine depends upon the design and construction of blades. The blades should be so designed that they are able to withstand the action of steam and the centrifugal force caused by high speed. As the steam pressure drops the length and size of blades should be increased in order to accommodate the increase in volume. The various materials used for the construction of blades depend upon the conditions under which they operate. Steel or alloys are the materials generally used.

(*ii*) Bearing to support the shaft.

(*iii*) Metallic casing which surrounds blades, nozzles, rotor etc.

(*iv*) Governor to control the speed.

(*v*) Lubricating oil system.

Steam from nozzles is directed against blades thus causing the rotation. The steam attains high velocity during its expansion in nozzles and this velocity energy of the steam is converted into mechanical energy by the turbine. As a thermal prime mover, the thermal efficiency of turbine is the usual work energy appearing as shaft power presented as a percentage of the heat energy available. High pressure steam is sent in through the throttle valve of the turbine. From it comes torque energy at the shaft, exhaust steam, extracted steam, mechanical friction and radiation.

8.4 CLASSIFICATION OF TURBINES

Steam turbines can be classified in following ways:

1. **According to the Action of Steam**

(*a*) Impulse turbine. (*b*) Reaction turbine.

In both these types of turbines, first the enthalpy of the steam of high pressure is converted into kinetic energy by passing it through nozzles.

(*a*) **Impulse turbines.** In impulse turbines, the steam coming out at a very high velocity through the fixed nozzle impinges on the blade fixed on the periphery of a rotor. The blades change the direction of the steam flow without changing the pressure. The resulting motive force causes the rotation of the turbine shaft. (Refer Fig. 8.1).

(*b*) **Reaction turbines.** In pure reaction turbines, the high pressure steam from the boiler is passed through the nozzles. When the steam comes out through these nozzles, the velocity of the steam increases relative to the rotating disc. The resulting reacting force on nozzles gives the rotating motion to the disc and the shaft. The shaft rotates in opposite direction to that of steam jet.

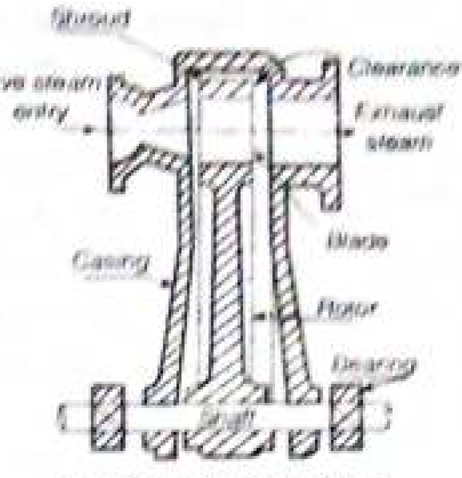

Fig. 8.1. Impulse turbine

In practice, we hardly find any reaction turbine as discussed above. In general practice, the impulse-reaction turbine is known as reaction turbine. Fig. 8.2 shows an impulsed reaction turbine.

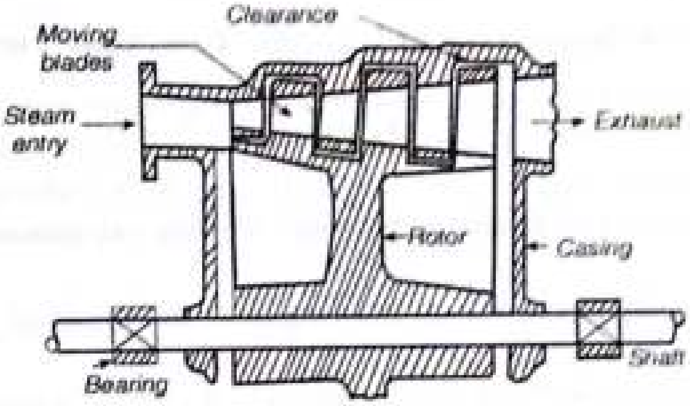

Fig. 8.2. Impulse-reaction turbine.

In these impulse-reaction turbines, the steam expands both in fixed and moving blades continuously as the steam passes over them. Therefore, the pressure drop occurs gradually and continuously over both moving and fixed blades.

2. **According to the direction of steam flow**
   - (*a*) Axial flow turbine.
   - (*b*) Radial flow turbine.
   - (*c*) Mixed flow turbine.
   - (*d*) Tangential flow turbine.
3. **According to the number of stages**
   - (*a*) Single stage turbine.
   - (*b*) Multistage turbine.
4. **According to the pressure of entering steam**
   - (*a*) Low pressure turbine - upto 2 kgf/cm^2.
   - (*b*) Medium pressure turbine - upto 40 kgf/cm^2.
   - (*c*) High pressure turbine - above 40 kgf/cm^2.
   - (*d*) Very high pressure turbine - above 170 kgf/cm^2.

  (*e*) Super-critical pressure turbine - above 225 kgf/cm^2.

5. **According to the condition of Exhaust Steam**
   (*a*) Condensing type turbine.
   (*b*) Non-condensing type turbine.
6. **According to the method of governing**
   (*a*) Throttle governed.
   (*b*) Nozzle governed.
   (*c*) By-pass governed.
   (*d*) Combination.
7. **According to the usage**
   (*a*) Constant speed stationary for power generation.
   (*b*) Variable speed stationary for turbo-blowers.
   (*c*) Variable speed mobile for ships.

Most of the power plant turbines are of the impulse-reaction type. But due to a number of reasons, like low volume at the high inlet pressure, the first one or two stages are of the impulse type. After the first impulse stage, there are usually a number of impulse-reaction stages. Nearly 20 to 30 stages are common with these reaction turbines.

Comparison between Impulse and Impulse-Reaction Turbine

The difference between the impulse and reaction turbines are :

1. In impulse turbines, the steam completely expands in the nozzle and its pressure remains constant during its flow through the blade passages. In reaction turbines steam expands partially in the nozzle and further expansion takes place in the rotor blades.
2. The relative velocity of the steam passing over the blade of impulse turbine remains constant.
3. The impulse turbine blades have symmetrical profile whereas the reaction turbine blades have aerofoil section. The area of flow, therefore, changes in the reaction turbine along the blade passage similar to that in a nozzle.
4. The number of stages required for reaction turbine are more compared with impulse turbine for the same power developed as the pressure drop in each stage is small.
5. The pressure on both ends of the moving blade of an impulse turbine is same, whereas different pressures exist on two ends of the moving blade of a reaction turbine.
6. The steam velocity in a reaction turbine is not very high and hence the speed of the turbine is relatively low.

8.5 COMPOUNDING OF STEAM TURBINES

If the entire pressure drop is carried out in single stage nozzle, then velocity of steam entering the turbine shall be of the order of 1500 m/sec, and the blade velocity will be of the order of 30,000 rpm. Such a high velocity is dangerous for the blades due to excessive centrifugal stresses and such a high speed of the turbine rotor is also not useful for practical purposes. Therefore a reduction gear shall be required between the turbine and the generator. This high entering velocity also results in high exit velocity, which gives a considerable loss of kinetic energy (about 10 to 12%). Therefore, the velocity of the blades is limited to 400 m/sec. In order to solve these problems, number of stages are employed, and the combination of these stages is known as compounding.

8.5 COMPOUNDING OF STEAM TURBINES

If the entire pressure drop is carried out in single stage nozzle, then velocity of steam entering the turbine shall be of the order of 1500 m/sec, and the blade velocity will be of the order of 30,000 rpm. Such a high velocity is dangerous for the blades due to excessive centrifugal stresses and such a high speed of the turbine rotor is also not useful for practical purposes. Therefore a reduction gear shall be required between the turbine and the generator. This high entering velocity also results in high exit velocity, which gives a considerable loss of kinetic energy (about 10 to 12%). Therefore, the velocity of the blades is limited to 400 m/sec. In order to solve these problems, number of stages are employed, and the combination of these stages is known as compounding.

1. Velocity Compounding

The drop in heat energy takes place only in the nozzle at the first stage and is converted into kinetic energy. This gain in kinetic energy of the steam is used by the rows of moving blades and finally exhausted from the last row of the blades. The function of fixed blades is merely to turn the steam into the direction required for entry into the next row of rotor blades without changing the pressure and velocity of the steam. (Refer Fig. 8.3).

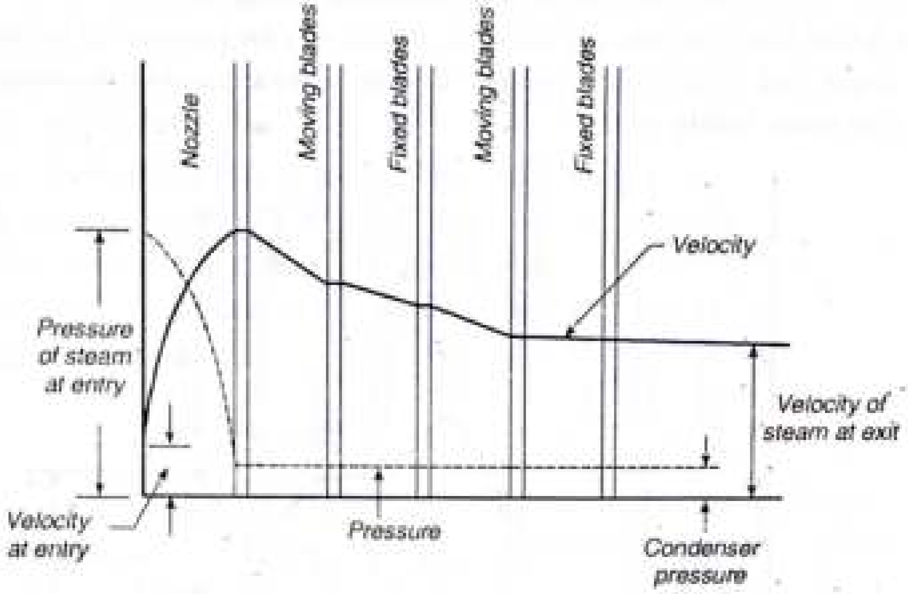

Fig. 8.3. Velocity compounded turbine.

Advantages of Velocity Compounding

1. Fewer number of stages (2 to 3 only) are required, therefore initial cost is less.
2. The space required is less.
3. Since the total pressure drop occurs in the nozzle itself, the turbine housing need not be made strong as the pressure in the housing is considerably less.

Limitations of Velocity Compounding

1. Friction losses are large due to high velocity of steam.
2. With the increase in number of stages the maximum blade efficiency decreases.

2. Pressure Compounding

In this compounding, the turbine is provide with one row of fixed blades (works as nozzles) at the entry of each row of moving blades. The total pressure drop of the steam does not takes place in a single nozzle but is divided among all the rows of fixed blades, which work as nozzles. The velocity and pressure variations of steam along the axis of the turbine are shown in Fig. 8.4.

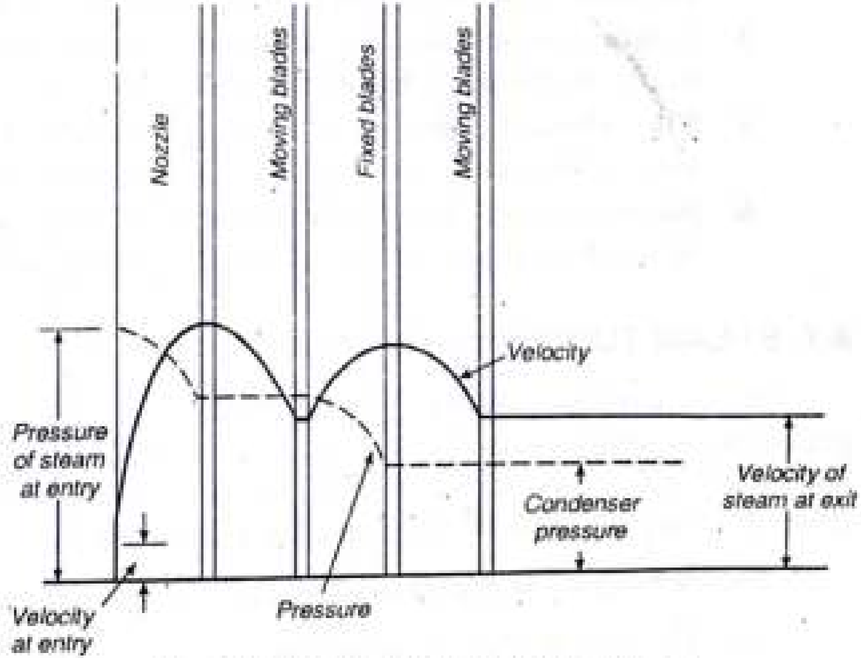

Fig. 8.4. Pressure compound steam turbine.

3. Velocity and Pressure Compounding

This is a combination of pressure and velocity compounding. The drop of pressure of steam is compounded as in pressure compounding in each stage, whereas velocity obtained in each stage is also compounded in several stages, as shown in Fig. 8.5.

This arrangement requires fewer stages for a given pressure drop and the turbine is compact one. The velocity and pressure variations of steam along the axis of the turbine are shown in Fig. 8.5. This method has the advantages of pressure compounding to provide higher pressure drop in each stage and hence fewer stages and the advantage of velocity compounding is to reduce the velocity of each blade row.

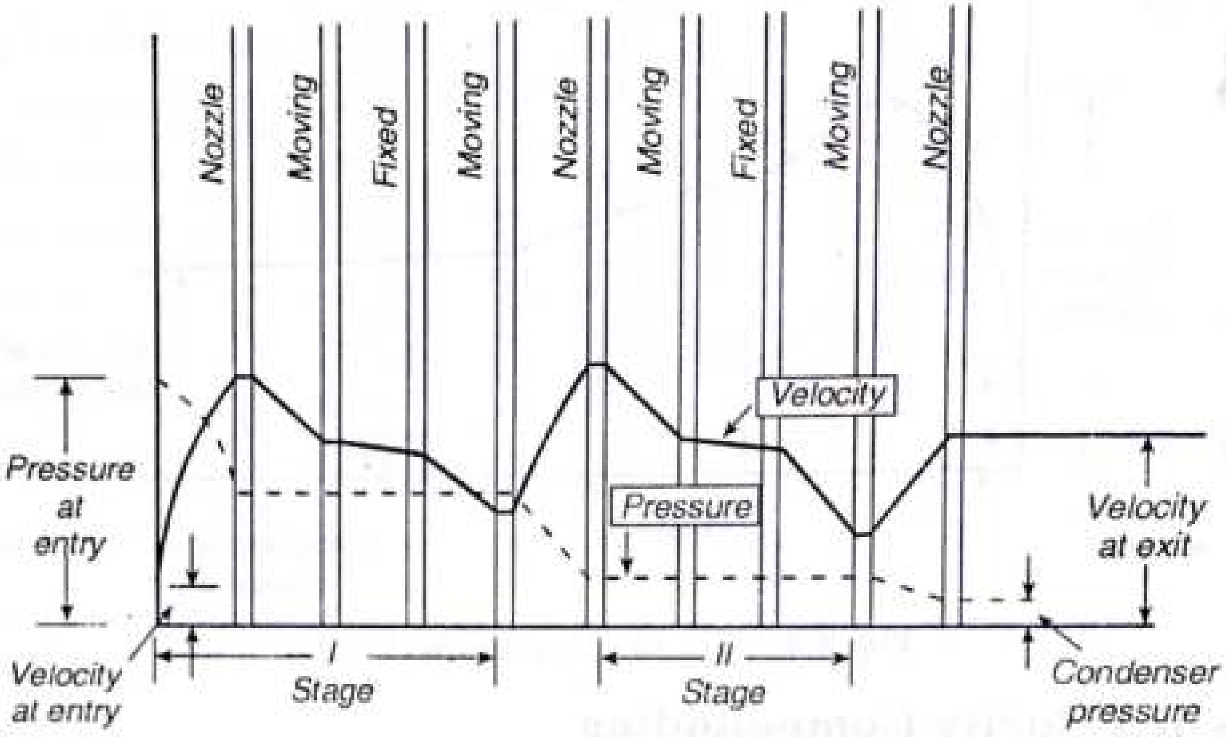

Fig. 8.5. Velocity and pressure compounding.

8.8 GOVERNING

Governing of steam turbine means to regulate the supply of steam to the turbine in order to maintain speed of rotation sensibly constant under varying load conditions. Some of the methods employed are as follows:

(*i*) Bypass governing
(*ii*) Nozzle control governing
(*iii*) Throttle governing.

(*i*) Fig. 8.6. shows **by-pass governing** arrangement. In this system the steam enters the turbine chest *(C)* through a valve *(V)* controlled by governor. In case of loads of greater than economic load a bypass valve (V_1) opens and allows steam to pass from the first stage nozzle box into the steam belt *(S)*.

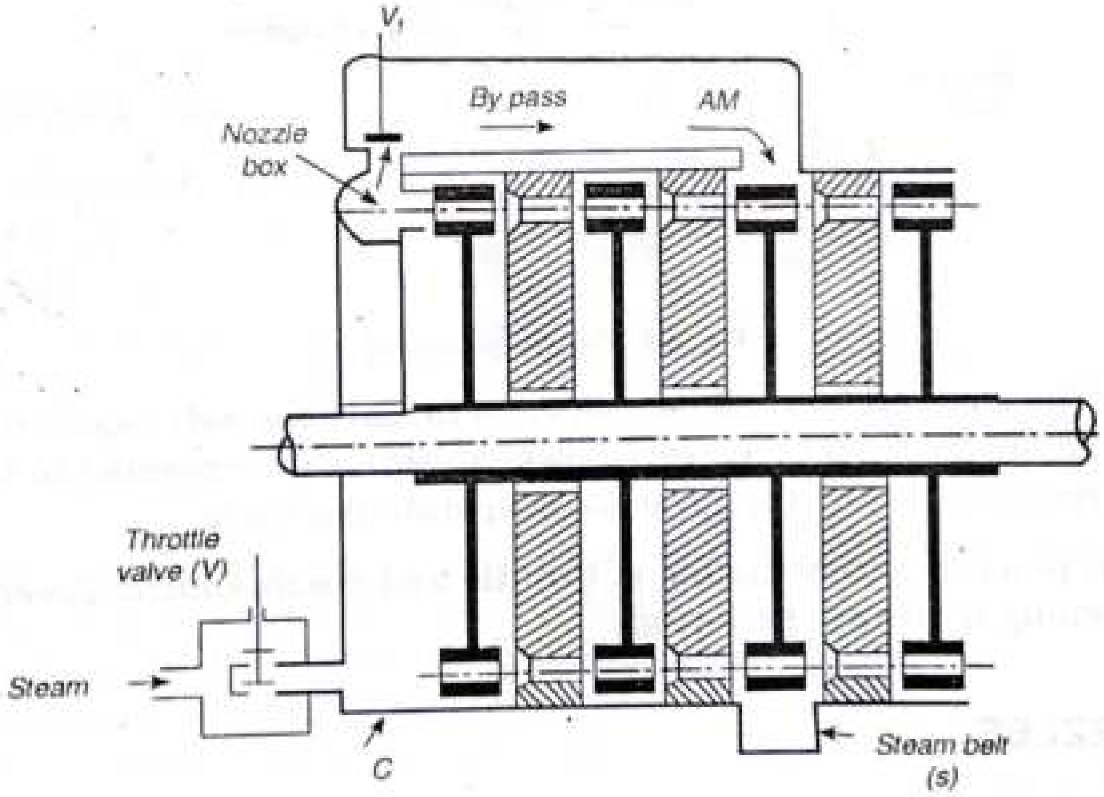

Fig. 8.6. By-pass governing.

(*ii*) Fig. 8.7 shows **nozzle governing** arrangement. In this method of governing the supply of steam of various nozzle groups N_1, N_2, and N_3 is regulated by means of valves V_1, V_2 and V_3 respectively. Fig. 8.8 shows nozzle governing control system.

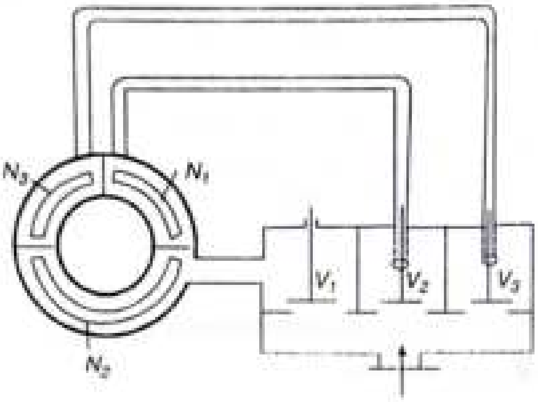

Fig. 8.7. Nozzle governing.

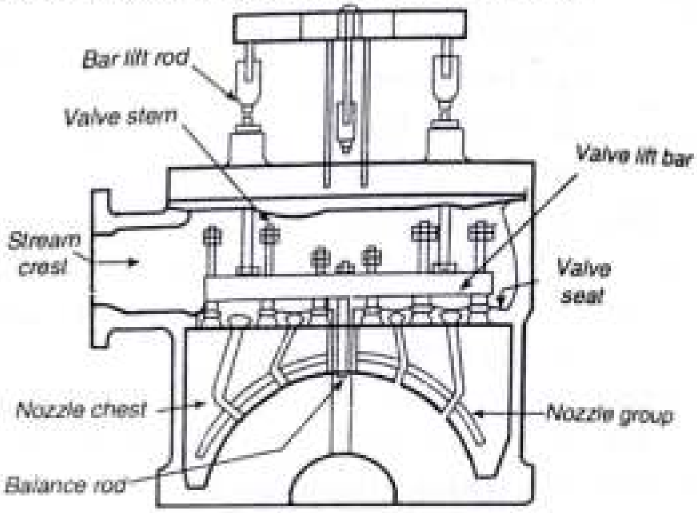

Fig. 8.8. Nozzle governing control.

(*iii*) Fig. 8.9 shows **throttle governing**. In this method of governing the double beat valve is used to regulate the flow of steam into the turbine. When the load on the turbine decreases, its speed will try to increase. This will cause the fly bar to move outward which will in return operate the lever arm and thus the double beat valve will get moved to control the supply of steam to turbine. In this case the valve will get so adjusted that less amount of steam flows to turbine.

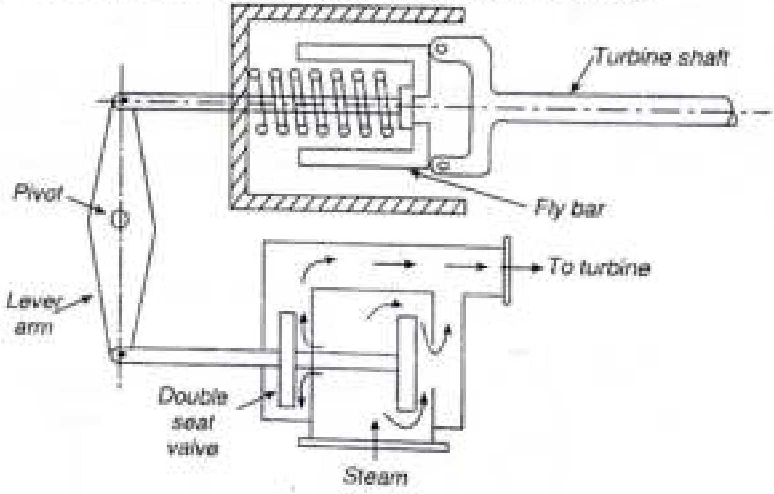

Fig. 8.9. Throttle governing.

The effort of the governor may not be sufficient to move the valve against the piston in big units, therefore, an oil operated relay (servo-mechanism) is incorporated in the circuit to amplify the small force produced by the governor to operate the valve.

Generally in practice a combination of throttle and nozzle control governing, or throttle and by-pass governing is always preferred.

B — CONDENSERS

8.17 INTRODUCTION

A steam condenser is meant to receive the exhaust steam from the turbine or engine, condense it and maintain a pressure at the exhaust lower than atmospheric. Some extra work is obtained due to exhaust at a pressure lower than the atmospheric. This improves the efficiency (at a pressure lower than the atmospheric) of the plant. Air inside the condenser should be pumped out continuously in order to maintain the vacuum. The condensation of steam occurs in the range of 25°C to 38°C.

Steam pressure in a condenser depends mainly on the flow rate and temperature of the cooling water and on the effectiveness of air removal equipment. Some of the advantages of a steam condenser are as follows:

(*i*) It increases power output. Power plant cycle improves in efficiency as the turbine exhaust pressure drops.

(*ii*) It recovers most of the feed water (in case of surface condenser) which is available at 45°C to 50°C. This saves the amount of fuel to be burnt in boiler.

(*iii*) The use of condenser, decreases the size of boiler installation.

The main disadvantage of condenser is that it adds to the initial cost of power plant as the condenser requires additional equipment such as cooling tower or cooling pond, vacuum pump, water circulating pump etc.

The vacuum obtainable in a condenser is governed by the outlet water temperature which in turn varies with the amount of condensing water used per kg of steam and its initial temperature. Air entertainment in the condenser has its effect upon the vacuum. The addition of air lowers the vacuum.

Advantages of Condensers

(*i*) Steam condensed by the condenser is used as feed water for boiler. This reduces the cost of fuel as the condensate is supplied at higher temperature of the boiler. It also reduces the capacity of the feed water cleaning system.

(*ii*) Increases the efficiency of the prime mover, as the enthalpy drop (T_1 - T_2) increases with the increase in vacuum in the condenser. This means reduction of steam consumption per unit of power generated.

(*iii*) Prevents the deposition of salt in the boiler by using the condensate instead of feed water from outer sources which contains salt. Deposition of salt in boiler reduces its efficiency and also reduces the life.

8.18 FUNCTIONS OF CONDENSER

It is an equipment in which exhaust steam from the turbine is condensed. During condensing process some heat of exhaust steam is decipated to the cooling water known as "circulating water".

In other words, when steam is the working fluid, it may be returned to the boiler and used over again and again. This can be done in a condenser most conveniently and economically by first condensing it and then pumping the resulting water into the boiler.

Main functions of condenser are:

(*i*) The primary object of condensing exhaust steam in a condenser is to make it possible to remove it economically at a pressure less than that of the atmosphere after it has done its work in the turbine and thus enable the steam to expand to a greater extent and do more work.

(*ii*) The secondary object of the condenser is to provide hot feed water for the boiler. The condensate is a pure hot water and therefore can be fed into the boiler directly without any treatment. Thus large savings are made and less fuel and time is required to raise the steam.

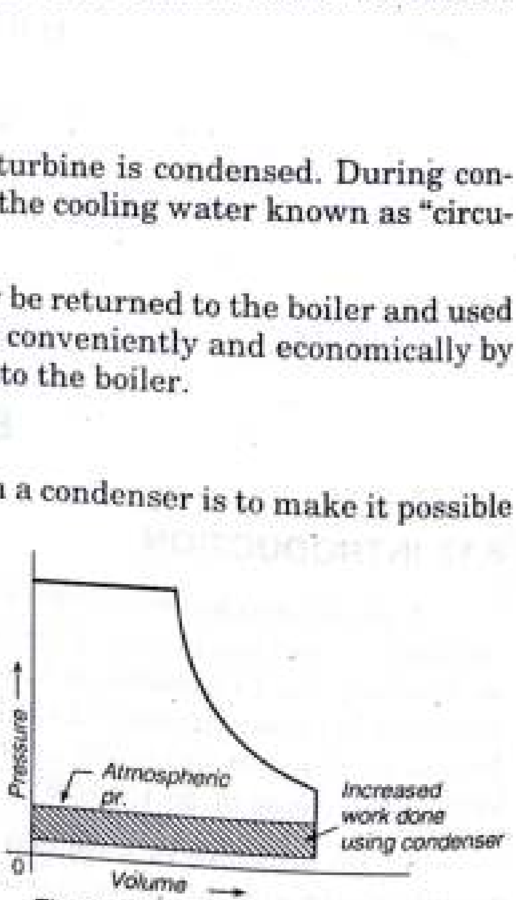

Fig. 8.23. Indicator diagram showing increased work done using condenser.

8.19 ELEMENTS OF A CONDENSING PLANTS

It means in addition to condenser, all the essential equipment required for the proper functioning of a condensing plant. Such as :

1. **A steam ejector or air pump,** which is needed to remove air and other non-condensable gases from the condenser. The air pump used to remove gases and air is known as **"Dry air Pump".**

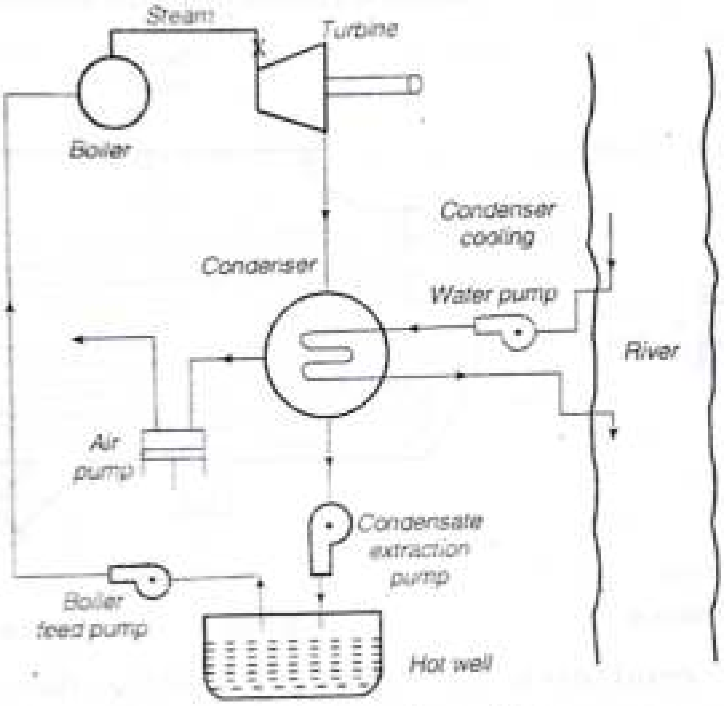

Fig. 8.24. Condensing system.

2. **A hot well,** for collecting the condensate.
3. **An extraction pump,** to remove the condensate from the condenser and to collect in the hot well and then to feed it into the boilers pre-heaters by means of feed water pump.
4. **A circulating water pump** to condense the exhaust steam of turbine in the condenser.
5. **Spray pond or cooling tower** for cooling the circulating water of condenser, when there is only a limited quantity of cooling water available. If the circulating water arrangement is through a river having sufficient water than no other cooling arrangement is required. Thus cold circulating water is taken from the river.

8.20 TYPES OF STEAM CONDENSERS

Steam condensers are mainly of two types :

1. Non-mixing type or surface condensers.
2. Mixing type or jet condensers.

1. Surface Condensers.

In surface condensers there is no direct contact between the steam and cooling water and the condensate can be re-used in the boiler. In such condenser even impure water can be used for cooling purpose whereas the cooling water must be pure in jet condensers. Although the capital cost and the space needed is more in surface condensers but it is justified by the saving in running cost and increase in efficiency of plant achieved by using this condenser. Depending upon the position of condensate extraction pump, flow of condensate and arrangement of tubes the surface condensers may be classified as follows :

(*i*) **Down flow type.** Fig. 8.25 shows a sectional view of down flow condenser. Steam enters at the top and flows downward. The water flowing through the tubes in one direction in lower half and comes out in the opposite direction in the upper half. Fig. 8.26 shows a longitudinal section of a two pass down-flow condenser.

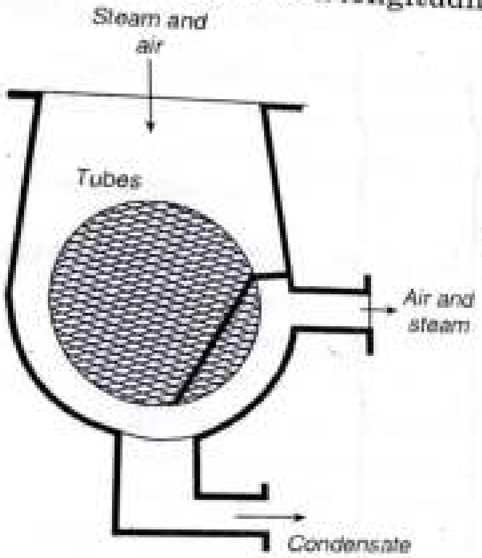

Fig. 8.25. Down flow condenser

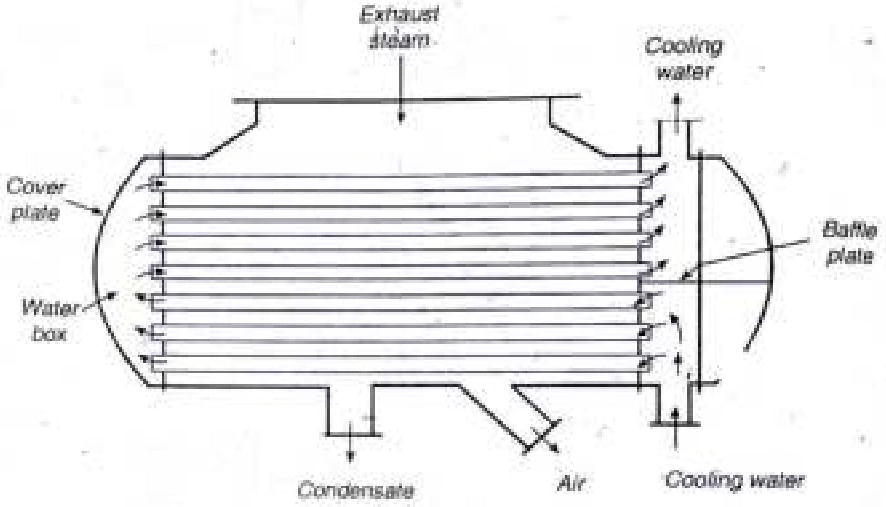

Fig. 8.26. 'L' section of down flow condenser

(*ii*) **Central flow condenser.** Fig. 8.27 shows a central flow condenser. In this condenser the steam passages are all around the periphery of the shell. Air is pumped away from the centre of the condenser. The condensate moves radially towards the centre of tube nest. Some of the exhaust steam while moving towards the centre meets the undercooled condensate and pre-heats it thus reducing undercooling.

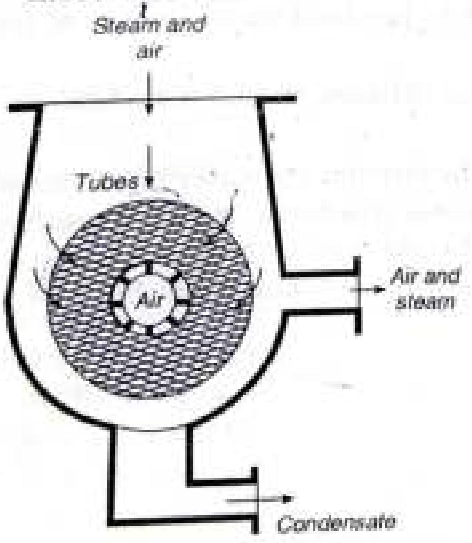

Fig. 8.27. Centra flow condenser

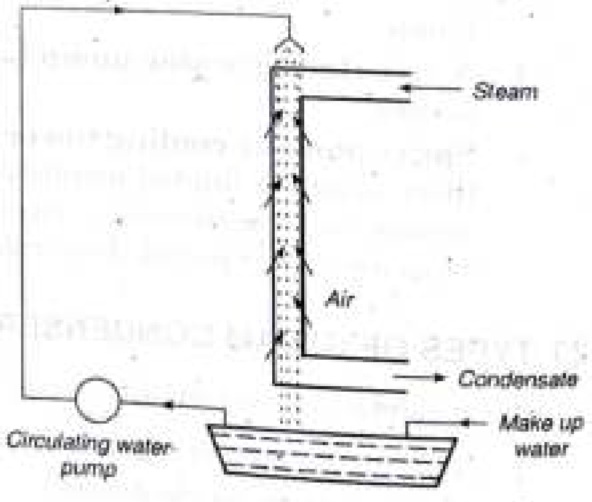

Fig. 8.28. Evaporation condenser.

(*iii*) **Evaporation condenser.** In the condenser (Fig. 8.28) steam to be condensed is passed through a series of tubes and the cooling water falls over these tube in the form of spray. A steam of air flows over the tubes to increase evaporation of cooling water which further increases the condensation of steam.

Advantages and disadvantages of surface condensers

The various advantages of a surface condenser are as follows:

(*i*) The condensate can be used as boiler feed water.

(*ii*) Cooling water of even poor quality can be used because the cooling water does not come in direct contact with steam.

(*iii*) High vacuum (about 73.5 cm of Hg) can be obtained in the surface condenser. This increases the thermal efficiency of the plant.

The various disadvantages of the surface condenser are as follows:

(*i*) The capital cost is more

(*ii*) The maintenance cost and running cost of this condenser is high.

(*iii*) It is bulky and requires more space.

Requirements of a modern surface condenser.

The requirements of ideal surface condenser used for power plants are as follows:

(*i*) The steam entering the condenser should be evenly distributed over the whole cooling surface of the condenser vessel with minimum pressure loss.

(*ii*) The amount of cooling water being circulated in the condenser should be so regulated that the temperature of cooling water leaving the condenser is equivalent to saturation temperature of steam corresponding to steam pressure in the condenser. This will help in preventing under cooling of condensate.

(*iii*) The deposition of dirt on the outer surface of tubes should be prevented. This is achieved by passing the cooling water through the tubes and allowing the steam to flow over the tubes.

(*iv*) There should be no air leakage into the condenser because presence of air destroys the vacuum in the condenser and thus reduces the work obtained per kg of steam. If there is leakage of air into the condenser air extraction pump should be used to remove air as rapidly as possible.

2. Jet condensers.

In Jet condensers the exhaust steam and cooling water come in direct contact with each other. The temperature of cooling water and the condensate is same when leaving the condensers.

Elements of the jet condenser are as follows :

(*i*) Nozzles or distributors for the condensing water.

(*ii*) Steam inlet.

(*iii*) Mixing chambers : They may be (*a*) parallel flow type (*b*) counter flow type depending on whether the steam and water move in the same direction before condensation or whether the flows are opposite.

(*iv*) Hot well.

In jet condensers the condensing water is called injection water.

(*i*) **Low level jet condensers (Parallel flow type).** In this condenser (Fig. 8.29) water is sprayed through jets and it mixes with steam. The air is removed at the top by an air pump. In counter flow type of condenser the cooling water flows in the downward direction and the steam to be condensed moves upward.

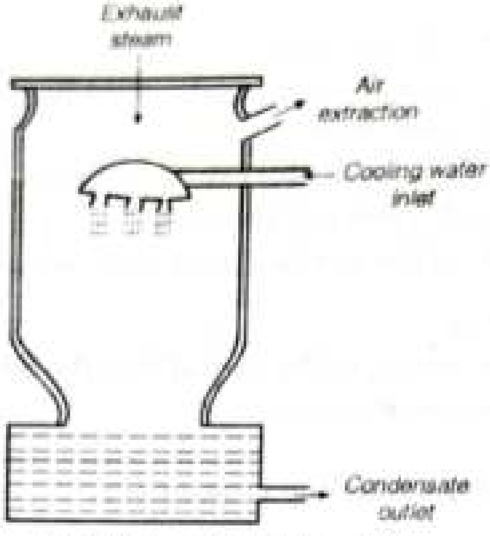

Fig. 8.29. Low level jet condenser.

(ii) **High level or Barometric condenser.** Fig. 8.30 shows a high level jet condenser. The condenser shell is placed at a height of 10.33 m (barometric height) above the hot well. As compared to low level jet condenser this condenser does not flood the engine if the water extraction pump fails. A separate air pump is used to remove the air.

(iii) **Ejector condenser.** Fig. 8.31 shows an ejector condenser. In this condenser cold water is discharged under a head of about 5 to 6 m through a series of convergent nozzles. The steam and air enter the condenser through a non-return valve. Steam gets condensed by mixing with water. Pressure energy is partly converted into kinetic energy at the converging cones. In the diverging cone the kinetic energy is partly converted into pressure energy and a pressure higher than atmospheric pressure is achieved so as to discharge the condensate to the hot well.

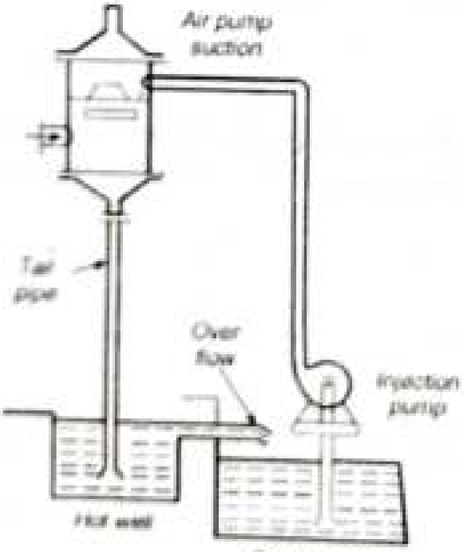

Fig. 8.30. High level jet condenser

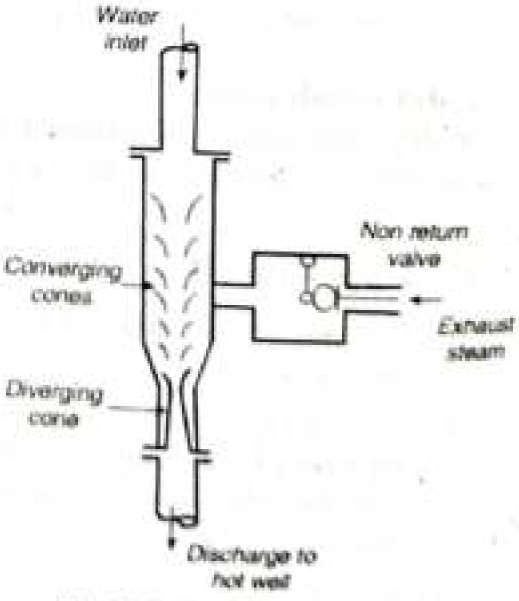

Fig. 8.31. Ejector condenser

3.19.6. Difference between Impulse and Reaction Turbines

S. No.	**Particulars**	**Impulse turbine**	**Reaction turbine**
1.	*Pressure drop*	Only in nozzles and not in moving blades.	In fixed blades (nozzles) as well as in moving blades.
2.	*Area of blade channels*	Constant	Varying (converging type).
3.	*Blades*	Profile type.	Aerofoil type.
4.	*Admission of steam*	Not all round or complete.	All round or complete.
5.	*Nozles / fixed blades*	Diaphram contains the nozzle.	Fixed blades similar to moving blades attached to the casing serve as nozzles and guide the steam.
6.	*Power*	Not much power can be developed.	Much power can be developed.
7.	*Space*	Requires less space for same power.	Requires move space for same power.
8.	*Efficiency*	Low.	High.
9.	*Suitability*	Suitable for small power requirements.	Suitable for medium and higher power requirements.
10.	*Blade manufacture*	Not difficult.	Difficult.

3.19.7. Impulse Turbines

3.19.7.1. Velocity Diagram for Moving Blade

Fig. 3.86 shows the velocity diagram of a *single stage impulse turbine*.

C_{bl} = Linear velocity of moving blade (m/s)
C_1 = Absolute velocity of steam entering moving blade (m/s)
C_0 = Absolute velocity of steam leaving moving blade (m/s)
C_{w_1} = Velocity of whirl at the entrance of moving blade
= tangential component of C_1
C_{w_0} = Velocity of whirl at exit of the moving blade
= tangential component of C_0
C_{f_1} = Velocity of flow at entrance of moving blade
= axial component of C_1
C_{f_0} = Velocity of flow at axit of the moving blade
= axial component of C_0

C_{r1} = Relative velocity of steam at moving blade at entrance
C_{r0} = Relative velocity of steam to moving blade at exit
α = Angle with the tangent of the wheel at which the steam with velocity C_1 enters. This is also called **nozzle angle**
β = Angle which the discharging steam makes with the tangent of the wheel at the exit of moving blade
θ = Entrance angle of moving blade
ϕ = Exit angle of moving blade.

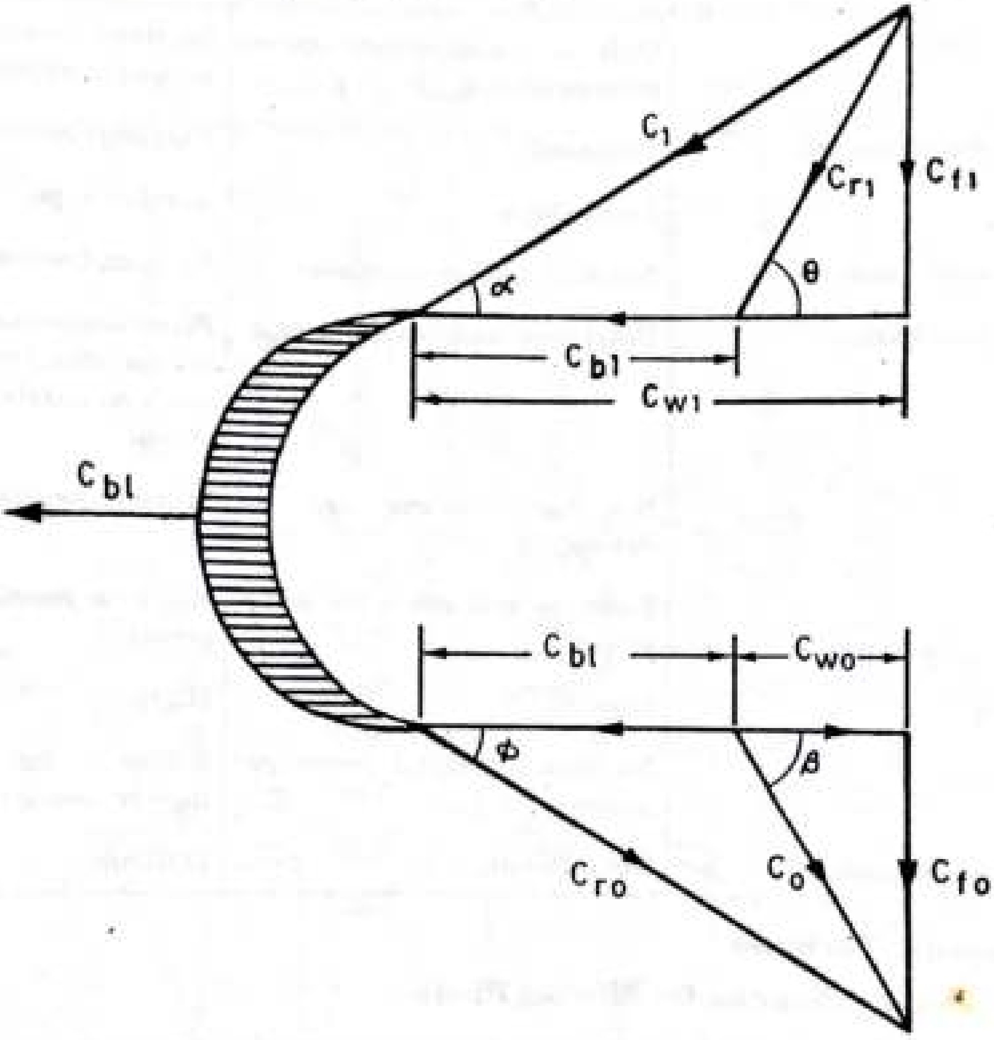

Fig. 3.86. Velocity diagram for moving blade.

The steam jet issuing from the nozzle at a velocity of C_1 impinges on the blade at an angle α. The tangential component of this jet (C_{w_1}) performs work or the blade, the axial component (C_{f_1}) however does no work but causes the steam to flow through the turbine. As the blades move with a tangential velocity of C_{bl}, the entering steam jet has a relative velocity C_{r_1} (with respect to blade) which makes an angle θ with the wheel tangent. The steam then glides over the blade without any shock and discharges at a relative velocity of C_0 at an angle ϕ with the tangent of the blades. The relative velocity at the inlet (C_{r_1}) is the same as the relative velocity at the outlet (C_{r_0}) if *there is no frictional loss at the blade*. The absolute velocity (C_0) of leaving steam make an angle β to the tangent at the wheel.

To have convenience in solving the problems of turbines it is a common practice to combine the two vector velocity diagrams on a common base which represents the blade velocity (C_{bl}) as shown in Fig. 3.87. This diagram has been obtained by superimposing the inlet velocity diagram on the outlet diagram in order that the blade velocity lines C_{bl} coincide.

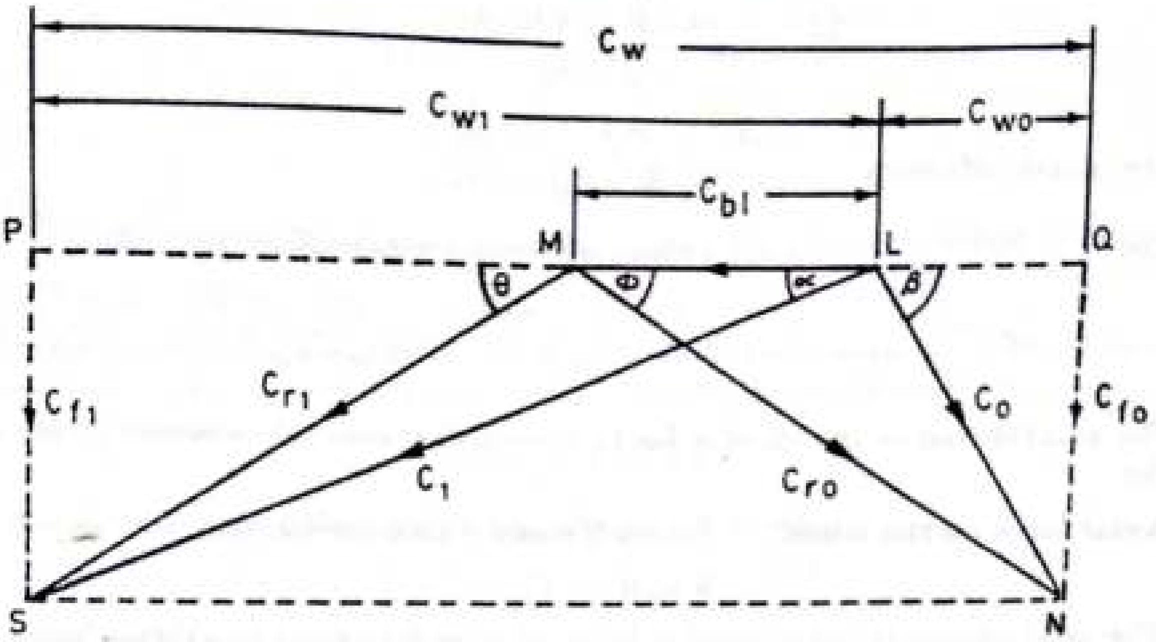

Fig. 3.87

13.19.7.2. Work done on the Blade

The work done on the blade may be found out from the change of momentum of the steam jet during its flow over the blade. As earlier discussed, it is only the velocity of whirl which performs work on the blade since it acts in its (blade) direction of motion.

From Newton's second law of motion,

Force (tangential) on the wheel = mass of steam × acceleration

= mass of steam/sec. × change of velocity

$= \dot{m}_s (C_{w_1} - C_{w_0})$ ...(3.39)

The value of C_{w_0} is actually negative as the steam is discharged in the *opposite direction* to the blade motion, therefore, due consideration should be given to the fact that the *values of* C_{w_1} *and* C_{w_0} *are to be added while doing the solution of the problem.*

Work done on blades/sec. = force × distance travelled/sec.

$= \dot{m}_s (C_{w_1} + C_{w_0}) \times C_{bl}$

Power per wheel $= \dot{m}_s (C_{w_1} + C_{w_0}) C_{bl}$

$$= \frac{\dot{m}_s C_w C_{bl}}{1000} \text{ kW} \quad \text{...(3.40)}$$

$(\because \; C_w = C_{w_1} + C_{w_0})$

$$\textbf{Blade or diagram efficiency} = \frac{\text{Work done on the blade}}{\text{Energy supplied to the blade}}$$

$$= \frac{\dot{m}_s (C_{w_1} + C_{w_0}) \cdot C_{bl}}{\dot{m} C_1^2}$$

$$= \frac{2C_{bl} (C_{w_1} + C_{w_0})}{C_1^2} \quad \text{...(3.41)}$$

If h_1 and h_2 be the total heats before and after expansion through the nozzles, then $(h_1 - h_2)$ is the heat drop through a stage of fixed blades ring and moving blades ring.

in Fig. 3.87. This diagram has been obtained by superimposing the inlet velocity diagram on the outlet diagram in order that the blade velocity lines C_{bl} coincide.

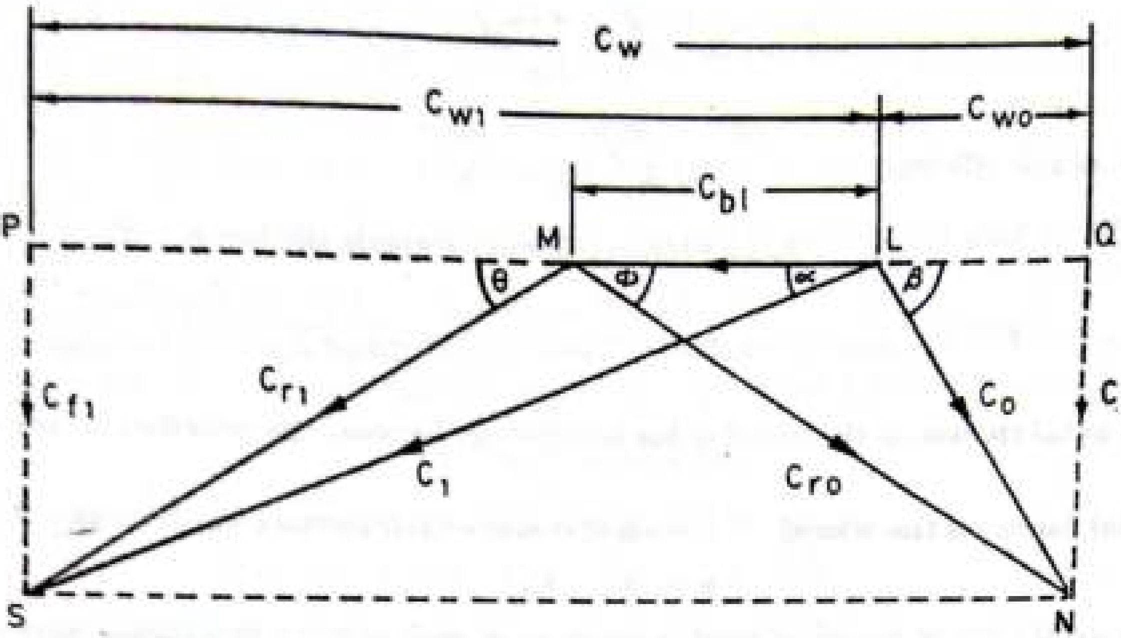

Fig. 3.87

13.19.7.2. Work done on the Blade

The work done on the blade may be found out from the change of momentum of the steam jet during its flow over the blade. As earlier discussed, it is only the velocity of whirl which performs work on the blade since it acts in its (blade) direction of motion.

From Newton's second law of motion,

Force (tangential) on the wheel = mass of steam × acceleration

= mass of steam/sec. × change of velocity

$$= \dot{m}_s (C_{w_1} - C_{w_0}) \quad \text{...(3.39)}$$

The value of C_{w_0} is actually negative as the steam is discharged in the *opposite direction* to the blade motion, therefore, due consideration should be given to the fact that the *values of* C_{w_1} *and* C_{w_0} *are to be added while doing the solution of the problem.*

Work done on blades/sec. = force × distance travelled/sec.

$$= \dot{m}_s (C_{w_1} + C_{w_0}) \times C_{bl}$$

Power per wheel $= \dot{m}_s (C_{w_1} + C_{w_0}) C_{bl}$

$$= \frac{\dot{m}_s C_w C_{bl}}{1000} \text{ kW} \quad \text{...(3.40)}$$

$$(\because \; C_w = C_{w_1} + C_{w_0})$$

$$\textbf{Blade or diagram efficiency} = \frac{\text{Work done on the blade}}{\text{Energy supplied to the blade}}$$

$$= \frac{\dot{m}_s (C_{w_1} + C_{w_0}) \, . \, C_{bl}}{\dot{m} C_1^2}$$

$$= \frac{2C_{bl} (C_{w_1} + C_{w_0})}{C_1^2} \quad \text{...(3.41)}$$

If h_1 and h_2 be the total heats before and after expansion through the nozzles, then $(h_1 - h_2)$ is the heat drop through a stage of fixed blades ring and moving blades ring.

∴ **Stage efficiency,** $$\eta_{stage} = \frac{\text{work done on blade per kg of steam}}{\text{total energy supplied per kg of steam}}$$

$$= \frac{C_{bl}\,(C_{w_1} + C_{w_0})}{(h_1 - h_2)} \qquad ...(3.42)$$

Now, nozzle efficiency $$= \frac{C_1^{\,2}}{2\,(h_1 - h_2)}$$

Also

$$\eta_{stage} = \text{blade efficiency} \times \text{nozzle efficiency}$$

$$= \frac{2\,C_{bl}\,(C_{w_1} + C_{w_0})}{C_1^{\,2}} \times \frac{C_1^{\,2}}{2(h_1 - h_2)} = \frac{C_{bl}\,(C_{w_1} + C_{w_0})}{(h_1 - h_2)}$$

The **axial thrust** on the wheel is due to *difference* between the velocities of flow at entrance and outlet.

Axial force on the wheel = mass of steam × axial acceleration

$$= \dot{m}_s\,(C_{f_1} - C_{f_0}) \qquad ...(3.43)$$

The *axial force on the wheel must be balanced or must be taken by a thrust bearing.*

Energy converted to heat by blade friction

= loss of kinetic energy during flow over blades

$$= \dot{m}_s\,(C_{r_1}^{\,2} - C_{r_0}^{\,2}) \qquad ...(3.44)$$

3.19.7.3. Blade Velocity Coefficient

In an impulse turbine, if friction is neglected the relative velocity will remain unaltered as it passes over blades. In practice the flow of steam over the blades is resisted by friction. The effect of the friction is to reduce the relative velocity of steam as it passes over the blades. In general, there is a loss of 10 to 15 percent in the relative velocity. Owing to friction in the blades, C_{r_0} is less than C_{r_1} and we may write

$$C_{r_0} = K.\,C_{r_1} \qquad ...(3.45)$$

where K is termed a **blade velocity coefficient.**

3.19.7.4. Expression for optimum Value of the Ratio of Blade Speed to Steam Speed (for maximum efficiency) for a Single Stage Impulse Turbine

Refer Fig. 3.87.

$$C_w = PQ = MP + MQ = C_{r_1}\cos\theta + C_{r_0}\cos\phi$$

$$= C_{r_1}\cos\theta\left[\frac{1 + C_{r_0}\cos\phi}{C_{r_1}\cos\theta}\right]$$

$$= C_{r_1}\cos\theta\,(1 + K\,.\,Z),\ \text{where } Z = \frac{\cos\phi}{\cos\theta} \qquad ...(i)$$

Generally, *the angles θ and φ are nearly equal for impulse turbine* and hence it can safely be assumed that Z is a constant.

But, $$C_{r_1}\cos\theta = MP = LP - LM = C_1\cos\alpha - C_{bl}$$

From equation (*i*), $$C_w = (C_1\cos\alpha - C_{bl})(1 + K\,.\,Z)$$

We know that, Blade efficiency, $\eta_{bl} = \dfrac{2C_{bl} \cdot C_w}{C_1^2}$ ...(*ii*)

$$\eta_{bl} = \frac{2C_{bl}\,(C_1 \cos\alpha - C_{bl})(1 + KZ)}{C_1^2}$$

$$= 2(\rho \cos\alpha - \rho^2)(1 + KZ)$$

$$= 2\rho\,(\cos\alpha - \rho)(1 + KZ) \qquad \text{...(iii)}$$

where $\rho = \dfrac{C_{bl}}{C_1}$ is the ratio of *blade speed to steam speed* and is commonly called as "**Blade speed ratio**".

3.19.8.2. Degree of Reaction (R_d)

The degree of reaction of reaction turbine stage is defined as the *ratio of heat drop over moving blades to the total heat drop in the stage.*

Thus the degree of reaction of reaction turbine is given by,

$$R_d = \frac{\text{Heat drop in moving blades}}{\text{Heat drop in the stage}}$$

$$= \frac{\Delta h_m}{\Delta h_f + \Delta h_m} \text{ as shown in Fig. 3.93.}$$

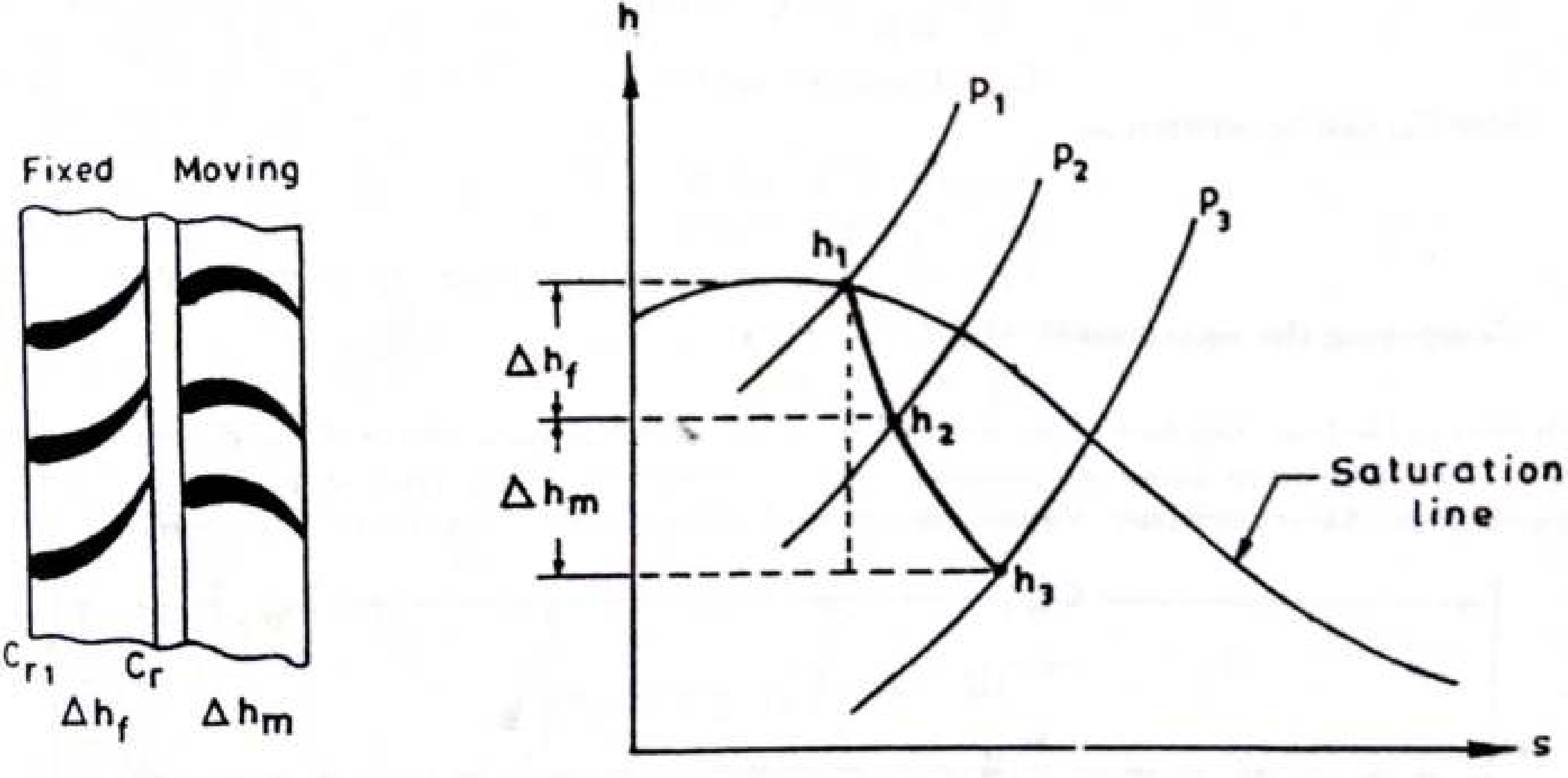

(a) (b)

3.19.9. Turbines Efficiencies

1. **Blade or diagram efficiency** (η_{bd}). *It is the ratio of work done on the blade per second to the energy entering the blade per second.*

2. **Stage efficiency** (η_{stage}). The stage efficiency covers all the losses on the nozzles, blades, diaphragms and discs that are associated with that stage.

$$\eta_{stage} = \frac{\text{net work done on shaft per stage per kg of steam flowing}}{\text{adiabatic heat drop per stage}}$$

$$= \frac{\text{net work done on blades – disc friction and windage}}{\text{adiabatic heat drop per stage}}.$$

3. **Internal efficiency** ($\eta_{internal}$). This is equivalent to the stage efficiency when applied to the whole turbine, and is defined as $\frac{\text{heat converted into useful work}}{\text{total adiabatic heat drop}}$.

4. **Overall or turbine efficiency** ($\eta_{overall}$). This efficiency covers internal and external losses ; for example, bearings and steam friction, leakage, radiation etc.

$$\eta_{overall} = \frac{\text{Work delivered at the turbine coupling in heat units per kg of steam}}{\text{total adiabatic heat drop}}$$

5. **Net efficiency or efficiency ratio** (η_{net}). It is the ratio

$$\frac{\text{brake thermal efficiency}}{\text{thermal efficiency on the Rankine cycle}}$$

Also the actual thermal efficiency

$$= \frac{\text{heat converted into useful work per kg of steam}}{\text{total heat in steam at stop valve – water heat in exhaust}}$$

Again, Rankine efficiency

$$= \frac{\text{adiabatic heat drop}}{\text{total heat in steam at stop valve – water heat in exhaust}}.$$

$$\eta_{net} = \frac{\text{heat converted into useful work}}{\text{total adiabatic heat drop}}.$$

Hence $\qquad \eta_{net} = \eta_{overall}.$

☞**Example 3.14.** *In an impulse turbine (with a single row wheel) the mean diameter of the blades is 1.05 m and the speed is 3000 r.p.m. The nozzle angle is 18°, the ratio of blade speed to steam speed is 0.42 and the ratio of the relative velocity at outlet from the blades to that at inlet is 0.84. The outlet angle of the blade is to be made 3° less than the inlet angle. The steam flow is 10 kg/s. Draw the velocity diagram for the blades and derive the following :*

(*i*) *Tangential thrust on the blades*
(*ii*) *Axial thrust on the blades*
(*iii*) *Resultant thrust on the blades*
(*iv*) *Power developed in the blades*
(*v*) *Blading efficiency.*

Solution. Mean diameter of the blades, $D = 1.05$ m

Speed of the turbine, $N = 3000$ r.p.m.

Nozzle angle, $\alpha = 18°$

Ratio of blade speed to steam speed, $\rho = 0.42$

Ratio, $\dfrac{C_{r_1}}{C_{r_0}} = 0.84$

Outlet blade angle, $\phi = \theta - 3°$

Steam flow rate $\dot{m}_s = 10$ kg/s.

Blade speed, $$C_{bl} = \frac{\pi DN}{60} = \frac{\pi \times 1.05 \times 3000}{60} = 164.5 \text{ m/s}$$

But $$\rho = \frac{C_{bl}}{C_1} = 0.42 \text{ (given)}$$

$$\therefore \quad C_1 = \frac{C_{bl}}{0.42} = \frac{164.5}{0.42} = 392 \text{ m/s}$$

With the data, $C_1 = 392$ m/s ;

$\alpha = 18°$, complete ΔLMS

$\theta = 30°$ (on measurement)

$\therefore \quad \phi = 30° - 3 = 27°$

Now complete the ΔLMN by taking $\phi = 27°$ and $C_{r_0} = 0.84\, C_{r_1}$.

Finally complete the whole diagram as shown in Fig. 3.103.

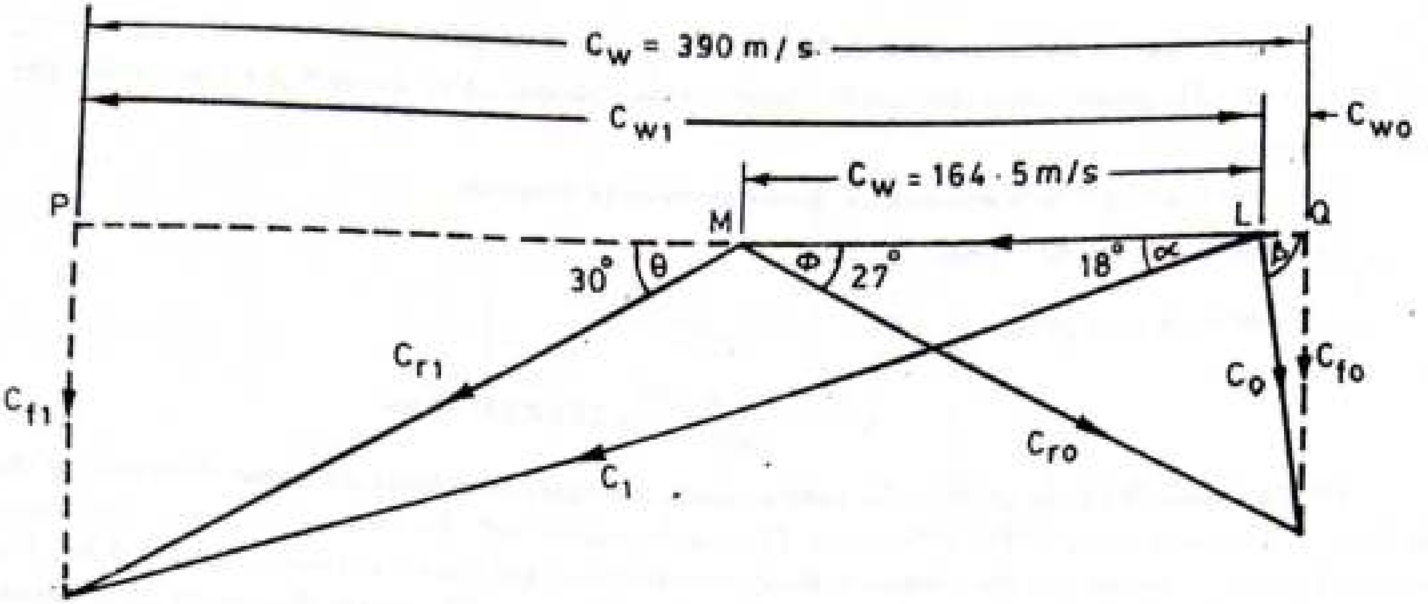

Fig. 3.103

(*i*) **Tangential thrust on the blades**

$$= \dot{m}_s (C_{w_1} + C_{w_0}) = 10 \times 390 = \mathbf{3900\ N.\ Ans.}$$

(*ii*) **Axial thrust**

$$= \dot{m}_s (C_{f_1} - C_{f_0}) = 10\,(120 - 95) = \mathbf{250\ N.\ Ans.}$$

(*iii*) **Resultant thrust**

$$= \sqrt{(3900)^2 + (250)^2} = \mathbf{3908\ N.\ Ans.}$$

(*iv*) **Power developed**

$$= \frac{\dot{m}_s (C_{w_1} + C_{w_0}) \times C_{bl}}{1000} = \frac{10 \times 390 \times 164.5}{1000} = \mathbf{641.55\ kW.\ Ans.}$$

(*v*) **Blading efficiency**

$$\eta_{bl} = \frac{2C_{bl}\,(C_{w_1} + C_{w_0})}{C_1^{\,2}} = \frac{2 \times 164.5 \times 390}{392^2} = \mathbf{83.5\%.\ Ans.}$$

Example 3.15. *In a stage of impulse reaction turbine provided with single row wheel, the mean diameter of the blades is 1 m. It runs at 3000 r.p.m. The steam issues from the nozzle at a velocity of 350 m/s and the nozzle angle is 20°. The rotor blades are equiangular. The blade friction factor is 0.86. Determine the power developed if the axial thrust on the end bearing of a rotor is 118 N.*

Solution. Mean diameter of the blades, $D = 1$ m

Speed of the turbine, $N = 3000$ r.p.m.

Velocity of steam issuing from the nozzle, $C_1 = 350$ m/s

Nozzle angle, $\alpha = 20°$

Blade angles, $\theta = \phi$

Blade friction factor, $K = 0.86$

Axial thrust $= 118\ N$

Blade, velocity, $C_{bl} = \dfrac{\pi DN}{60} = \dfrac{\pi \times 1 \times 3000}{60} = 157$ m/s

—With the data, $C_{bl} = 157$ m/s, $C_1 = 350$ m/s, $\alpha = 20°$ draw the ΔLMS (Fig. 3.104).

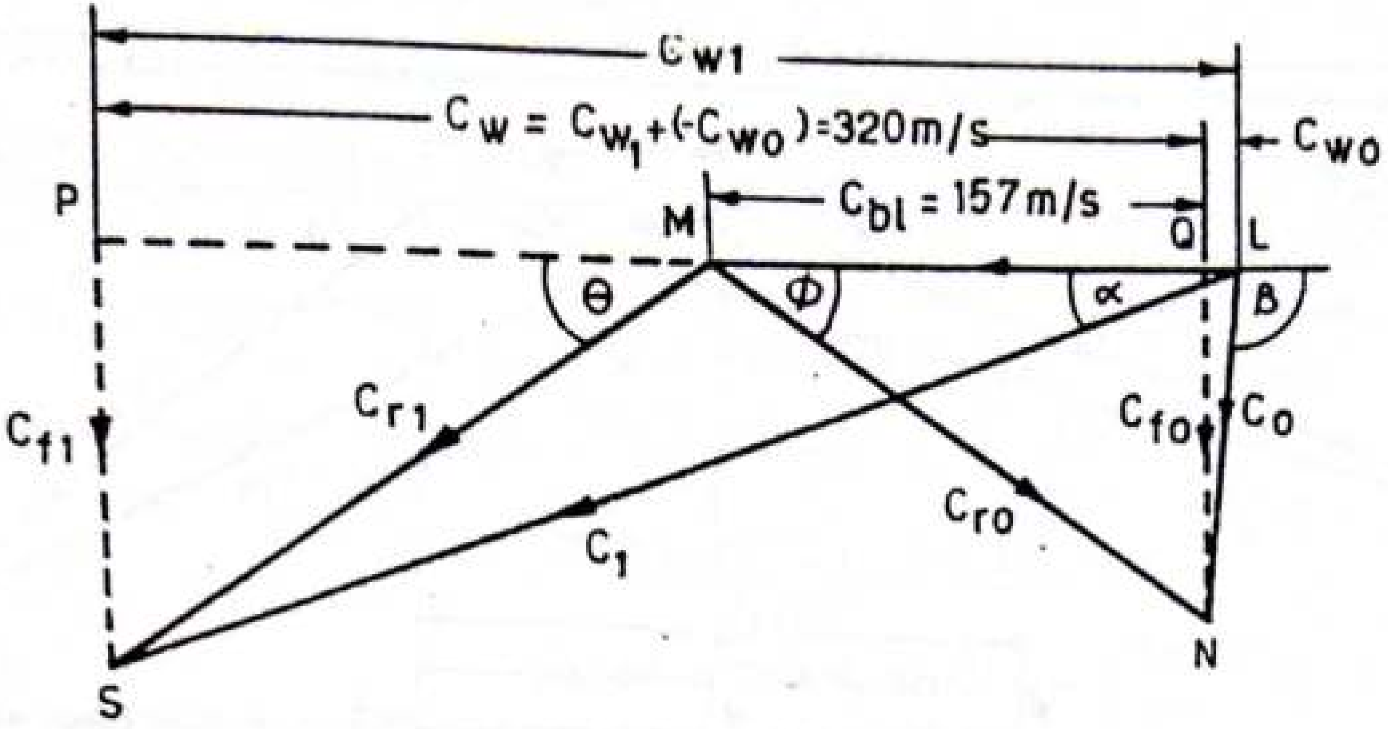

Fig. 3.104

By measurement, $\theta = 35°$

Since the blades are equiangular, $\theta = \phi = 35°$

—Now with $\phi = 35°$ and $C_{r_0} = 0.86\, C_{r_1}$, complete the ΔLMN.

On measurement, $$C_{f_1} = 122 \text{ m/s}, \; C_{f_0} = 102.5 \text{ m/s}$$

Also, $$\text{axial thrust} = \dot{m}_s (C_{f_1} - C_{f_0}) = 118$$

$$\therefore \quad \dot{m}_s = \frac{118}{C_{f_1} - C_{f_0}} = \frac{118}{(120 - 102.5)} = 6.74 \text{ kg/s}$$

Further in this case, $$C_w = C_{w_1} + C_{w_0} = C_{w_1} + (-C_{w_0}) = 320 \text{ m/s}$$

Now, *power developed*, $$P = \frac{\dot{m}_s (C_{w_1} + C_{w_0}) \times C_{bl}}{1000} \text{ kW}$$

$$= \frac{6.74 \times 320 \times 157}{1000} = \mathbf{338.6\ kW.\ Ans.}$$

Problem:

→ In an impulse turbine (with a single row of wheel) the mean diameter of blades is 1.05 m and the speed is 3000 r.p.m. The nozzle angle is 18°, the ratio of blade speed to steam speed is 0.42. The ratio of the relative velocity at outlet from the blades to that at inlet is 0.84. The outlet angle of the blade is to be made 3° less than the inlet angle. The steam flow is 10 kg/sec. Draw the velocity diagram of the blades and derive the following:

① Tangential thrust on the blades.
(ii) Axial thrust on the blades.
(iii) Resultant thrust on the blades.
(iv) Power developed in the blades.
Ⓥ Blading efficiency.

Ans: $D = 1.05\ m$, $N = 3000$ r.p.m, $\angle \alpha = 18°$, $\rho = \frac{C_{bl}}{C_1} = 0.42$,

$\frac{C_{ro}}{C_{ri}} = 0.84$, $\phi = \theta - 3°$, $m_s = 10$ kg/sec.

$C_{bl} = \frac{\pi D N}{60} = \frac{\pi \times 1.05 \times 3000}{60} = 164.5$ m/sec.

$C_1 = \frac{164.5}{0.42} = 392$ m/sec.

$\cos\alpha = \frac{C_{wi}}{C_1} \Rightarrow \cos 18 = \frac{C_{wi}}{392}$

$\Rightarrow C_{wi} = 392 \times \cos 18° = 373$ m/sec.

→ $C_{f1} = C_1 \times \sin\alpha = 392 \times \sin 18 = 121.13$ m/sec.

$\tan\theta = \dfrac{C_{fi}}{C_{wi} - C_{bl}} = \dfrac{121.13}{373 - 164.5} = 0.58$

$\Rightarrow \theta = 30.15° \simeq 30°$

$\Rightarrow \phi = \theta - 3 = 27°$

$C_{ri} = \sqrt{C_{fi}^2 + (C_{wi} - C_{bl})^2} = \sqrt{121.13^2 + (373 - 164.5)^2} =$

$= 241.13$ m/sec.

$C_{ro} = 0.84 \times C_{ri} = 202.55$ m/sec

$C_{fo} = C_{ro} \times \sin\phi = 202.55 \times \sin 27 = 91.95 = 92$ m/s.

$C_{wo} = C_{ro} \cos\phi - C_{bl} = 202.55 \times \cos 27 - 164.5 = 15.97$ m/s

(i) Tangential thrust on the blades $= m_s (C_{wi} + C_{wo})$

$= 10(373 + 15.97) = 3889.7 = 3890$ N.

(ii) Axial thrust $= m_s (C_{fi} - C_{fo})$

$= 10(121.13 - 92) = 291.3$ N.

(iii) Resultant thrust $= \sqrt{3890^2 + 291.3^2} = 3900$ N.

(iv) Power developed $= \dfrac{m_s (C_{wi} + C_{wo}) C_{bl}}{1000}$

$= \dfrac{10(373 + 15.97) \times 164.5}{1000} = 640$ kW

(v) Blading efficiency $= \dfrac{2 C_{bl} (C_{wi} + C_{wo})}{C_1^2}$

$= \dfrac{2 \times 164.5 \times 389}{392^2} = 83.28\%$

4.4 SITE SELECTION

A few important factors to be considered for selecting a site for thermal power station are discussed hereunder:

1. **Availability of coal.** The major source of energy which is available in India for thermal power plants is coal. Since large quantity of coal is required for a thermal power station (about 5,000 to 6,000 tons per day for a plant of 400 MW capacity), it is necessary to install the power station near the coal mines. In this case, generated power is transported to the long distances through high voltage transmission lines. If the plant is located at the some distance from the coal fields, it should be connected by rail to the coal mines for economical transportation.
2. **Ash Disposal Facilities.** The ash removal is a major problem in India, because the coal available for power generation contains large percentages of ash (20 to 40%). Therefore, a huge quantity of ash is required to be handled. Ash handling problem is more serious as it comes out in hot condition, is highly corrosive, and pollute the atmosphere. Therefore, sufficient space must be available to dispose off large quantity of ash. Presently efforts are being made to use ash in road construction, brick making and other processes.
3. **Availability of sufficient and cheap land of required quantity.** Sufficient land at cheap rates should be available. The land should include the space required for coal storage, ash disposal, plant building, machinery, cooling towers, switch yard, office complex, staff colony, provision for future expansion, and for other purposes.

   The selected site for power plant should have good bearing capacity so as to withstand the dead load of the plant, forces transmitted due to machine operation and wind velocity etc.
4. **Availability of water.** A large quantity of water is required for condenser, disposal of ash, as feed water to the boiler and for the use by working staff. Although large savings in the water requirements have been effected by the use of large and highly efficient concrete cooling towers and multistage feed water heating for large reductions in the quantity of cooling water required.

   A 200 MW thermal power station requires about 50 thousand tons/hr of circulating water for condenser and about 1000 tons/hr of make-up water. Even when cooling towers are employed a sufficient quantity of water to provide for make-up is necessary. The water required to feed the boiler must be as pure as possible to avoid scaling in the boiler tubes. A large quantity of water is also required for the disposal of the ash, if hydraulic system is used.

In view of the above, it is necessary to locate the thermal power plant near the water source which will be able to supply the required quantity of water throughout the year.

5. **Transport facilities.** Transport is also an important consideration in locating the thermal power station. It is always necessary to have a railway line available near the power station for bringing in heavy machinery for installation and for bringing the coal.
6. **Availability of labour.** Cheap and sufficient labour should be available at the proposed site for construction of the plant.
7. **Distance for populated area.** Since smoke, dust, fly ash and other gases produced due to combustion of coal pollute the atmosphere, the plant should be situated, as far as possible, away from the densely populated area. This is also necessary to avoid nuisance due to heat discharged from the power plant.

   The site selected should be capable of supporting a large building and heavy machinery.

8. Avoidance of obstruction to flying in the vicinity of aerodromes.
9. There should be no adverse effect on fisheries and other species in the river due to cooling water.
10. The location of the site in relation to the defence requirements.
11. Main wind direction and water currents in cooling water source (sea, lake or river) in order to minimize air and water pollution and other ecological considerations.

PART C — COOLING WATER SYSTEMS

8.25 INTRODUCTION

Heat rejected in a condenser is taken up by the water. As water comes out of the condenser, it gets heated and in case no natural source of water is available, the same water may be recirculated through the condenser (known as closed system), after cooling. The quantity of water required is considerably high. A 100 MW plant may require about 300,000 kg/hour of steam to be condensed in the condenser corresponding to this quantity of cooling water required will be something like 1000 tons/hr. Site conditions determine the method to be used for supplying the cooling water to the condensers, and may be one of the following systems:

1. River/sea or canal/lake water system.
2. Combined river and cooling water system.
3. Cooling tower or spray pond system.

As we have already discussed that a condenser is a device in which exhaust steam from steam turbines is condensed and the heat energy given up by the steam during condensation is taken up by the cooling water. The water coming out of the condenser is hot and is cooled in order that it may be recirculated through the condenser.

Availability of cooling water predominantly decides the plant site. The high cost of water makes it necessary to use cooling towers for the water coming out of condenser, in a closed system, before it is used again.

8.26 TYPES OF WATER COOLING SYSTEMS

1. Direct use of river or sea.

Large power stations require enough quantity of cooling water per hour. Such plants are usually located near a river or sea. The water is constantly drawn from the river by the pump, filtered and circulated through the condenser. Hot coolant is discharged back into the river (Fig. 8.37)

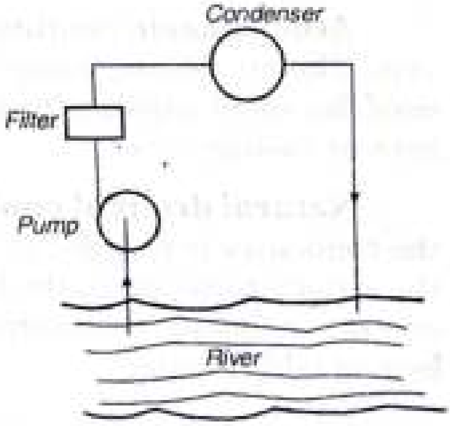

Fig. 8.37.

2. Cooling ponds.

In this system (Fig. 8.38) warm condensing water from the condenser is sprayed through nozzles over a pond of large area and cooling effect is mainly due to evaporation from the surface of water. In this system sufficient amount of water is lost by evaporation and windage.

Some of the factors which influence the rate of heat dissipation from a cooling pond are as follows :

(*i*) Area and depth of pond
(*ii*) Temperature of water entering the pond
(*iii*) Atmospheric temperature
(*iv*) Wind velocity
(*v*) Relative humidity
(*vi*) Shape and size of water spray nozzles.

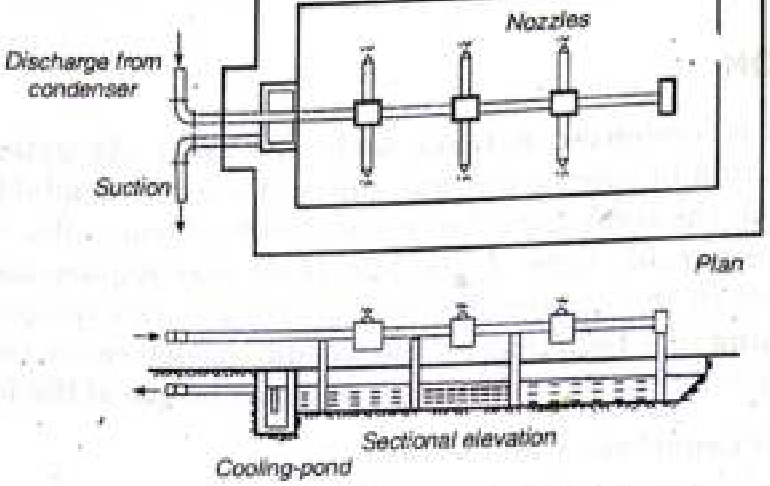

Fig. 8.38. Cooling with spray arrangement.

The ponds should be placed where the prevailing winds are not obstructed. The spray of water, as it comes in contact with atmospheric air, loses its heat and cold water is recirculated.

3. Cooling towers

The different types of cooling towers are as follows :

1. Atmospheric cooling tower.
2. Natural draught cooling towers.
3. Forced or induced drought cooling tower.

Atmospheric cooling tower. In this cooling tower hot water is allowed to fall over louvers. The air flowing across in transverse direction cools the falling water. These towers are used for small capacity power plants such as diesel power plants. Fig. 8.39 shows an atmospheric cooling tower.

Natural drought cooling towers. In natural draught cooling tower, the hot water from the condenser is pumped to the troughs and nozzles situated near the bottom. Troughs spray the water which falls in the form of droplets into a pond situated at bottom of the tower. The air enters the cooling tower from air openings provided near the base, rises upward and take up heat of falling water.

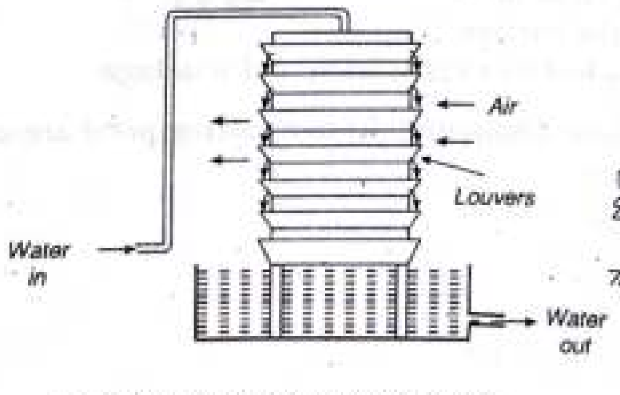

Fig. 8.39. Atmospheric cooling tower.

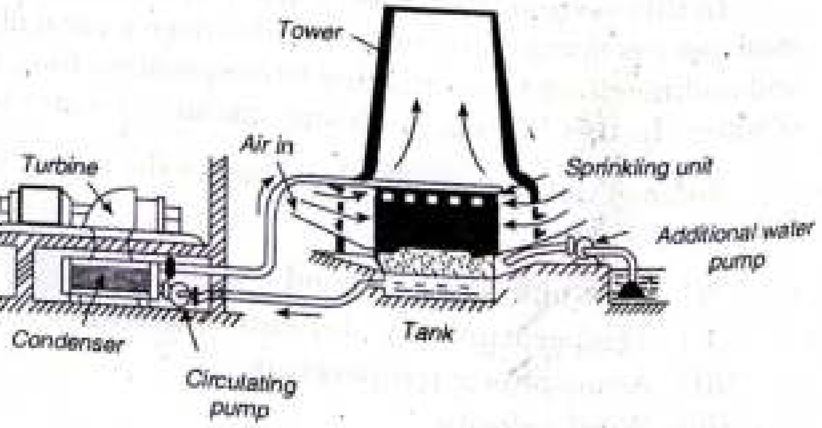

Fig. 8.40. Cooling tower with turbine.

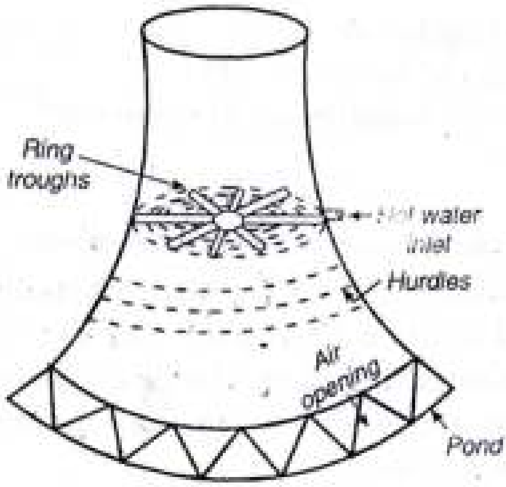

Fig. 8.41. Hyperbolic cooling tower.

Cooling towers may be made up of timber, concrete or steel. A concrete hyperbolic cooling tower is shown in Fig. 8.41. Fig. 8.42 shows the water circulation from the cooling tower to the condenser. Fig. 8.40 shows the cooling tower in which the position of turbine has also been shown. The system consists of turbine, condenser. Circulating pump, tank, additional water pump and sprinkling unit.

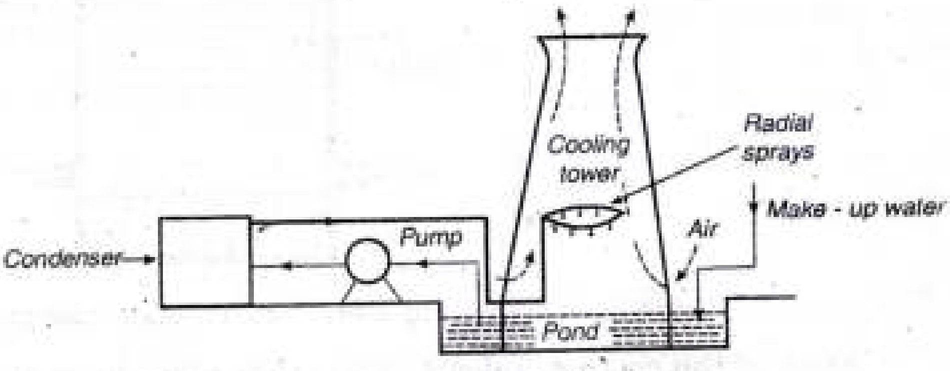

Fig. 8.42. Water circulation.

Hyperbolic towers offer greater resistance to wind pressure, eliminates shearing stresses and internal bracing, thus avoiding the formation of eddies. With the widening of the top of chimney permits condensation within the tower. It also avoids local fogging and warm air circulation. Chimney shape also create its own draft, assuming efficient operation.

The air is delivered through the holes in the side walls of the tower. The circulating water is delivered to the upper part of the watering unit where it flows down and gives its heat to the surrounding air. The cooled water flows into the tank and is circulated through the condenser. Towers made up of the concrete are preferred because they are stable against larger air pressure, their maintenance cost is low and they have larger capacities.

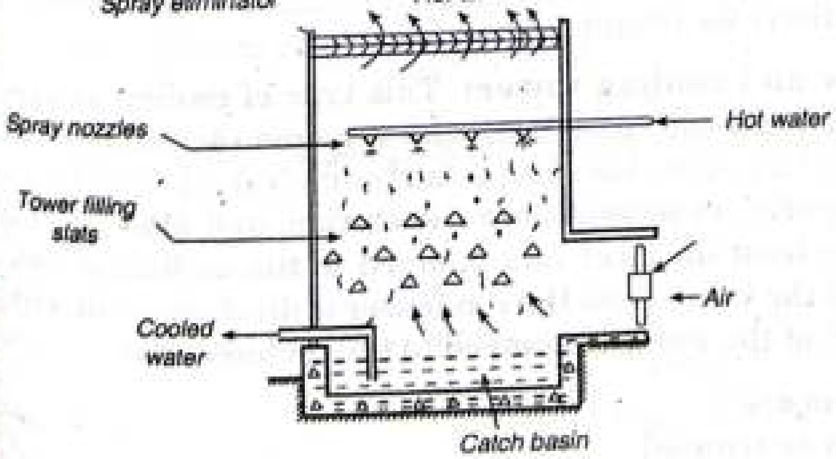

Fig. 8.43. Forced draft cooling tower.

Forced draught cooling towers. In this tower draught fan is installed at the bottom of tower. The hot water from the condenser enters the nozzles. The water is sprayed over the tower filling slats and the rising air cools the water. A forced draught cooling tower is shown in Fig. 8.43.

The various factors that affect cooling of water in a cooling tower are as follows :

(*i*) Size and height of cooling tower.
(*ii*) Velocity of air entering the tower.
(*iii*) Temperature of hot water coming out of condenser.
(*iv*) Temperature of air.
(*v*) Humidity of air.
(*vi*) Accessibility of air to various parts of cooling tower.

Mechanical draft cooling towers may be forced draft cooling towers or induced draft towers. Fig. 8.44. shows an induced draft cooling tower. The hot water is allowed to pass through the air flowing upward in the counter direction. The draft fan installed at top of tower draw air through the large openings in the tower. The air moving the upward direction cools the water. Induced draft towers produce less noise.

In the cooling tower water cools by :

(*i*) evaporation. (*ii*) heat transfer to the air.

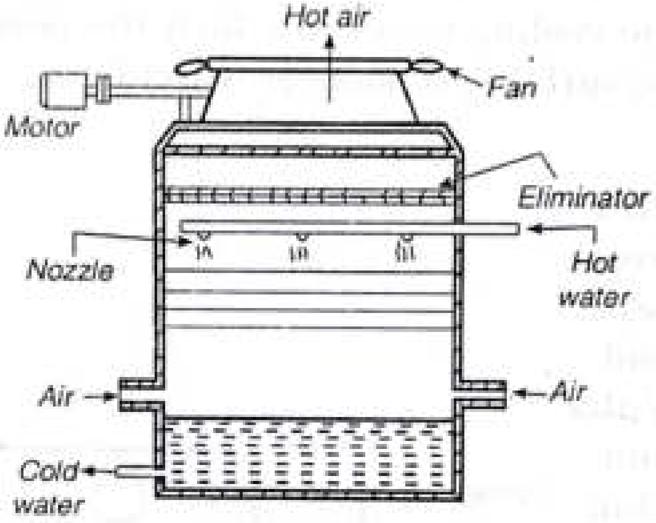

Fig. 8.44. Induced draught cooling tower.

Most of the cooling (about 75%) takes place by evaporation. Make up water should be continuously added to the tower collecting basin to replace the water lost by evaporation and spray carry over.

NUCLEAR POWER PLANT

INTRODUCTION:

→ As large amount of coal and petroleum are being used to produce energy, time may come when their reserves may not be able to meet the energy requirements. Thus there is a tendency to seek alternative source of energy.

→ Heat produced due to fission of U and Pu ~~has opened up a new source of power~~ is used to heat water to generate steam which is used for running turbo-generator.

→ It has been found that one kg of U can produce as much energy as can be produced by burning 4500 tonnes of high grade coal. This shows that it can be successfully employed for producing low cost energy

→ first nuclear power plant is at Tarapur (Trombay) in 1956. It has two boiling water reactors (B.W.R.) each of 200 MW capacity

→ The other two nuclear power plants with BWR are at Rawat Bhata in Rajasthan and at Kalpakkam in Tamil Nadu.

→ 6 units are now under various phases of operation construction or design two each at Kota, Kalpakkam, Narora. They are all of the CANDU (Canadian - Deuterium - Uranium) type, most suited to Indian conditions.

→ India has limited deposits of Uranium and would not be dependent on foreign supply to enriched fuel. CANDU reactor, donot require large capital and operating outlays for fuel enrichment

Comparison with steam plants:

→ Nuclear plants as well as thermal plants, both are presently installed with high unit capacity of 500 to 1000 MW. Now-a-days, the nuclear power is preferred where there are no hydro-potentials and the coals fields are far away from the required load centres,

1. The number of workman required for the operation of nuclear power plant is much less than a steam power plant. This reduces the cost of operation.

2. The capital cost of the plant falls sharply if the size of of the plant is increased. The capital cost as structural materials, piping, storage mechanism etc. is much less than similar expenditure of steam. However, the expenditure of nuclear reactor and building complex is much higher.

3. There are no fuel transportation, handling and storage charges and also there is no problem of ash disposal.

4. It occupies less space in comparison to thermal plants, therefore the civil construction cost is also less.

5. It is more economical compared with thermal plants in areas which are remote from coal fields.

Important terms in nuclear energy:

→ Atom of an element is the smallest (ultimate) particle that can exist and still retain the characteristics of that element.

→ An atom consists of a nucleus at the centre and electrons revolving around the nucleus in well defined orbits.

→ Nucleus consists of protons and neutrons, which are together called as nucleons.

→ The electric charge on the proton is equal in magnitude but opposite in sign to that on an electron and therefore atom as a whole is electrically neutral. The no. of protons in the nucleus is equal to the no. of electrons in the orbit.

→ Any addition of electron to the neutral atom make the atom negatively charged. Similarly any subtraction of electron will make it positively charged. Such atom is known as ion

→ Atomic energy is a consequence of the redistribution of particles with the atomic nuclei.

→ The no. of protons in an atom is known as atomic number.

→ The total no. of protons and neutrons in the nucleus of an atom is known as mass number.

→ Some elements exist in more than one form, with the same atomic no. but with different mass no; These are known as isotopes of an element.

→ Nuclear power engineering is generally with the variations of nucleons in nucleus.

Nuclear fission:

→ fission is the process in which heavy nucleus is split when it is bombarded by certain particles. Some of the isotopes of the heaviest elements, Uranium 235, Uranium 233 and Plutonium 239, can upon absorbing neutrons, be readily fissioned.

→ This fission of the nucleus produces two or rarely three, fragments moving at high speeds, two or three neutrons and considerable energy.

→ This process is used in nuclear power plants for generation of energy. The kinetic energy of the fission fragments and the radiant energy is ultimately converted into heat in the surrounding material. This heat is finally used to produce steam for the operation of turbine and generators.

→ Uranium exist as isotopes of U^{234}, U^{235} and U^{238}, out of these isotopes U^{235} is most unstable. When a neutron is captured by a nucleus of an atom of U^{235}, it splits up roughly into two equal fragments and about 2.5 neutrons are released and a large amount of energy (nearly 200 million electron volts MeV) is produced. This is called fission process.

→ The neutrons so produced are very fast moving neutrons and can be made to fission other nuclei of U^{235} thus enabling a chain reaction to take place. When a large number of fissions occur, enormous amount ~~of~~ heat is produce.

→ The neutrons released have a very high velocity of the order 1.5×10^7 m/sec. The energy liberated in the chain reaction is according to Einstein law (Also known as energy mass relationship) $E = mc^2$

E = energy produced, m = mass in grams, c = speed of light in cm/sec equivalent to 3×10^{10} cm/sec.

→ out of 2.5 neutrons released in fission of each nuclei of U^{235}, one neutron is used to sustain the chain reaction, about 0.9 neutron is captured by U^{238}, which gets converted into fissionable material, Pu^{239} and about 0.6 neutrons is partly absorbed by control rod material, coolant, moderator and partly escape from the reactor.

→ If thorium is used in the reactor core, it produces fissionable material U^{233}. $Th^{232} + \text{neutron} \rightarrow U^{233}$

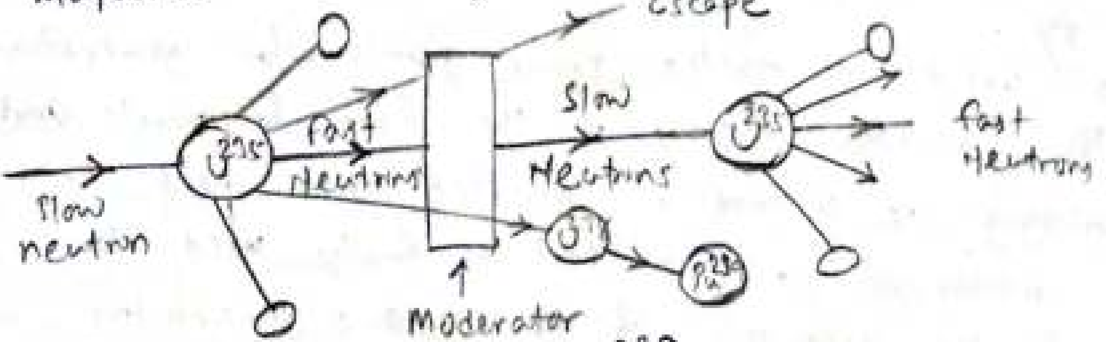

$U^{235} \rightarrow U^{238} + \text{neutron} = Pu^{239}$.
(neutron absorbed)

→ U^{233} and Pu^{239} so produced are fissionable material and can be used as nuclear fuel and are known as secondary fuel. U^{235} is called primary fuel.

→ chain reaction producing constant rate of heat energy can continue only if it is balanced by

1. Escape of neutrons from the fissionable materials
2. fission capture by U^{235} and Pu^{239} and U^{233}
3. Non fission capture by moderator, control rods, fission fragments and by impurities etc.

Chain reaction:

→ A chain reaction is that process in which the number of neutrons keeps on multiplying rapidly (in geometrical progression) during fission till whole of the fissionable material is disintegrated.

→ The chain reaction will become self-sustaining or self propagating only if, for every neutron absorbed, at least one fission neutron becomes available for causing fission of another nucleus.

→ This condition can be conveniently expressed in the form of multiplication factor or reproduction factor of the system which may be defined as

$$K = \frac{\text{No. of neutrons in any particular generation}}{\text{No. of neutrons in the preceding generation.}}$$

→ If $K>1$, chain reaction will continue and if $K<1$, ~~can~~ chain reaction cannot be maintained.

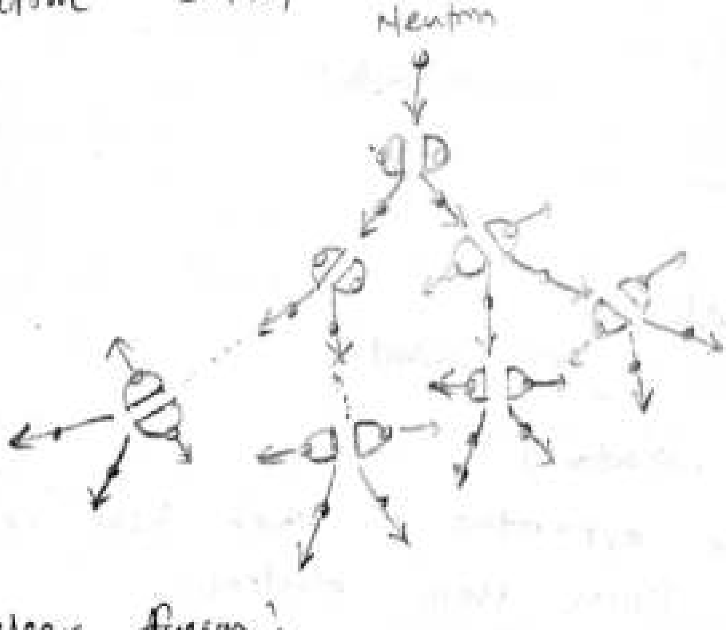

Nuclear fusion:

→ It is the process of combining or fusing two lighter nuclei into a stable and heavier nuclide. In this case also, large amount of energy is released because mass of the product nucleus is less than the masses of the two nuclei which are fused.

→ To have practical value, fusion reactions must occur in a such a manner as to make them self-sustaining i.e. more energy must be released than is consumed in initiating the reaction.

→ Energy liberated in the sun and other stars is due to the nuclear fusion reactions occuring at the very high stellar temp of 30 million °K.

Fertile material:

→ It is defined as the material which absorbs neutrons and undergoes spontaneous changes which leads to the formation of fissionable material.

→ U^{238} and Th^{232} are fertile materials. They absorb neutrons and produce fissionable materials Pu^{239} and U^{233} respectively.

$$\text{Fertile material} \left\{ \begin{array}{l} Th^{232} + \text{neutron} \rightarrow U^{233} \\ U^{238} + \text{neutron} \rightarrow Pu^{239} \end{array} \right\} \text{Fissile material}$$

Nuclear reactor:

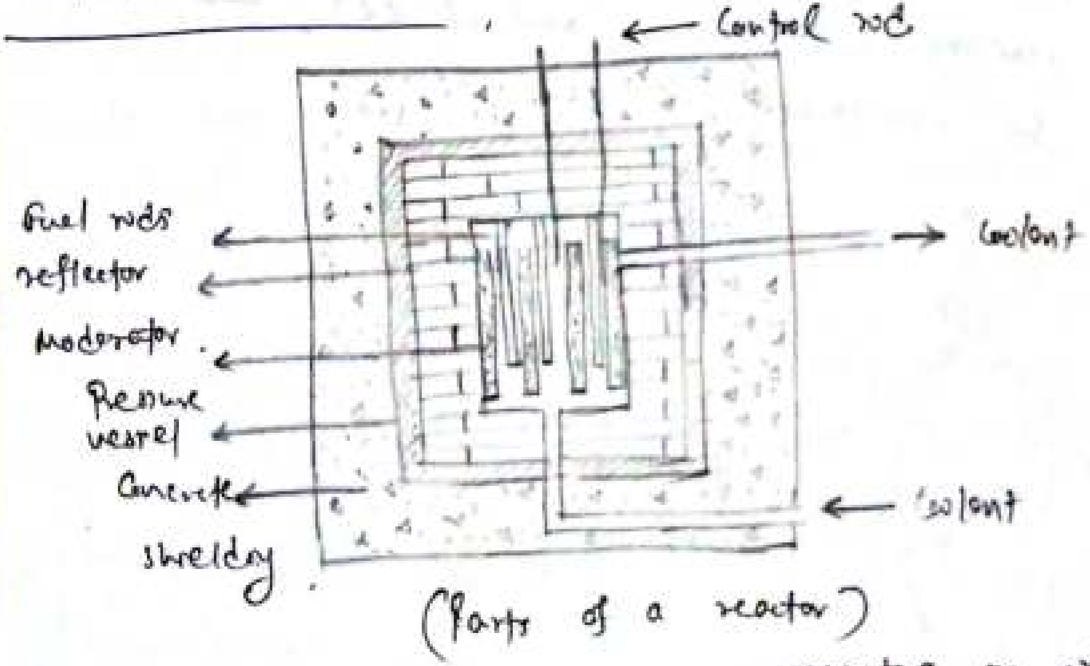

(Parts of a reactor)

→ A nuclear reactor is an apparatus in which heat is produced due to nuclear fission chain reaction.

→ It is regarded as the substitute for the boiler of steam plant or C.C. of a gas turbine plant.

→ Heat produced is by fission where as in steam and gas turbine plant by combustion. The other cycle of operation and components required are exactly same.

Main components :

(1) Nuclear fuel : fuel should be fissionable material which can be defined as an element or isotope whose nuclei can be caused to undergo nuclear fission by nuclear bombardment and to produce a fission chain reaction.

→ It can be U^{233}, U^{235}, Pu^{239}.

→ Natural Uranium found in earth crust contains 3 isotopes namely U^{234}, U^{235}, U^{238} and their avg. %.

$U^{238} \rightarrow 99.3\%$, $U^{235} = 0.7\%$, $U^{234} \rightarrow$ Trace.

→ out of these, U^{235} is most unstable and is capable of sustaining chain reaction and has been given the name primary fuel. U^{233} and Pu^{239} are artificially produced from Th^{232} and U^{238} respectively and are called secondary fuel.

→ Uranium deposits are found in countries such as Congo, Australia, Czechoslovakia, Portugal, Canada, U.S.A., U.S.S.R., U.K. etc.

(2) Moderator :

→ In the chain reaction, the neutrons produced are fast moving neutrons. These fast moving neutrons are far less effective in causing the fission of U^{235} and try to escape from the reactor.

→ To improve the utilization of these neutrons, their speed is reduced.

→ It is done by colliding them with the nuclei of other material which is lighter, does not capture the neutrons but scatters them. Each such collision causes loss of energy and speed of the fast moving neutrons is reduced. Such material is called the moderator.

→ Slow neutrons are easily captured and chain reaction proceeds smoothly.

→ Ex : Graphite, heavy water and Beryllium are used as moderator.

It should have following properties

1. It should have high thermal conductivity.
2. Should be available in large quantity.

3. Should have high melting point
4. Should provide great resistance to corrosion.
5. Should be stable under heat and radiation.
6. Should be able to slow down neutrons

③ Control rods: It is helpful in controlling following functions.

ⓐ To start the nuclear chain reaction when the reactor is started from cold.

ⓑ The chain reaction should be ~~started~~ maintained at steady state condition (controlled chain reaction) at required level.

ⓒ To shut down the reactor automatically under emergency condition.

→ Nuclear reactor contains as much fuel as is sufficient to operate a large power plant for some months.

→ The consumption of this fuel and the power level of the reactor depends upon its neutron flux in the reactor core.

→ The energy produced is so much that if it is not controlled properly the entire core and surrounding structure may melt and fission products may come out.

→ Control rods in the cylindrical or sheet form are made of Boron or Cadmium, These rods can be moved in and out of the holes in the reactor core assembly.

→ Their insertion absorbs more neutrons and damps down the reaction and their withdrawal absorbs less neutrons.

→ Thus power is controlled by shifting control rods which may be done manually or automatically.

→ It should possess following properties
1. It should have adequate heat transfer properties
2. Should be stable under heat and radiation.
3. Should be corrosion resistant.
4. Should be strong and be able to shut down the reactor instantly
5. Should have sufficient cross-sectional area for the absorption.

④ Reflector :

→ The neutrons produced in the fission will be partly absorbed by the fuel rods, moderator, coolant or structural material etc.

→ Neutrons left unabsorbed will try to leave the reactor core never to return to it and will be lost. Such losses should be minimised.

→ It is done by surrounding the reactor core by a material called reflector which will send the neutrons back into the core.

→ Returned neutrons can cause more fission.

→ Generally the reflector is made up of graphite and beryllium.

⑤ Coolant :

→ It flows through and around the reactor core. It is used to transfer the large amount of heat produced in the reactor due to fission of the nuclear fuel during chain reaction.

→ The coolant either transfers its heat to another medium or if the coolant used is water it takes up the heat and gets converted into steam in the reactor which is directly sent to the turbine.

→ coolant should have a low melting point and high boiling point

→ should not corrode the material with which it comes in contact.

→ should have high heat transfer coefficient.

→ Radioactivity induced in coolant by the bombardment should be nil.

→ Various fluids used as coolant are water (light water or heavy water), gas (Air, CO_2, H_2, He), liquid metals such as sodium or mixture of sodium and potassium and inorganic and organic fluids.

→ Coolant of greater density and higher specific heat demands less pumping power and water satisfies this condition. water is a good coolant and satisfies this condition.

⑥ Reactor vessel :

→ It is a strong walled container housing the core of the power reactor. It contains moderator, reflector, control rods, thermal shielding.

⑦ Biological shielding :

- → Shielding the radioactive zones from possible radiation hazard is essential to protect the operating men from the harmful effects
- → During fission of nuclear fuel, α-particles, β particles, γ particles and neutrons are produced. Out of these γ- rays and neutrons are of main significance. A protection must be provided against them.
- → Thick layers of lead or concrete are provided all round the reactor for stopping the γ- rays. Thick layers of metals or plastics are sufficient to stop the α and β - particles.

Types of Reactors :

(1) Pressurised - water Reactor (PWR)

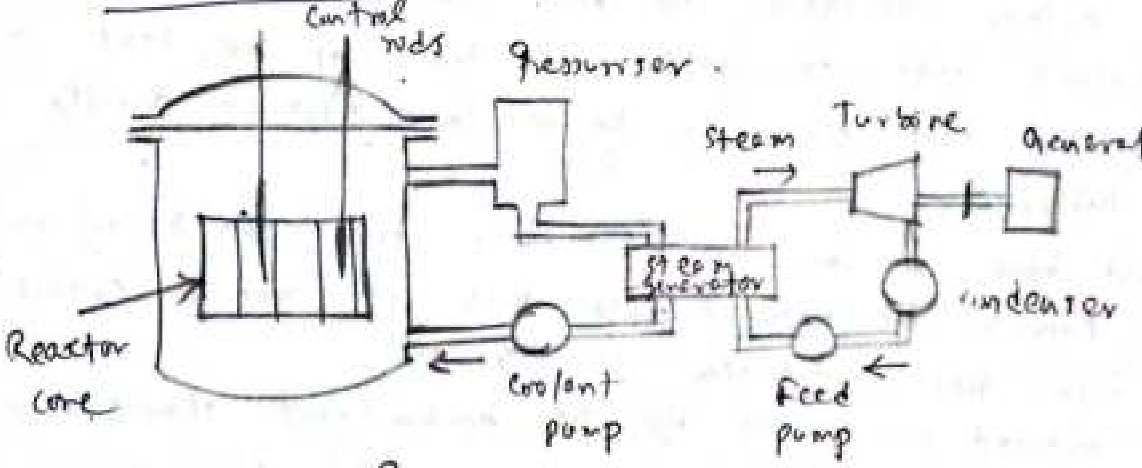

(P. W. R. nuclear plants)

- → It uses enriched Uranium oxide as fuel. Water is used as coolant and moderator.
- → Water passes through the reactor core and taken up the heat liberated due to nuclear fission of the fuel.
- → In order that water may not boil and remain in liquid state it is kept under a pressure of about 1200 p.s.i. by the Pressuriser.
- → This enables water to take up more heat from the reactor.
- → From the pressuriser water flows to the steam generator where it passes on its heat to the feed water which in turn

gets converted into steam.

Advantages :

1. steam supplied to the turbine is free from contamination.
2. The reactor is compact in size.
3. Light water is the cheapest coolant and moderator.
4. Cooling system is simple.
5. fission products are not circulated. Therefore, it grants complete freedom to inspect and maintain the turbine, feed heaters and condenser during operation.
6. when more power is demanded, the reactor responds to supply accordingly.
7. It allows to reduce the fuel cost extracting more energy per unit wt. of fuel.

Disadvantages :

1. High pressure requires strong pressure vessel and hence requiring high capital cost
2. The cost of reactor is high as it uses enriched uranium
3. The thermodynamic efficiency of the cycle is low (about 20%)
4. The corrosion problem is more severe due to high pressure and high temp. steam in the core.
5. Steam is produced at relatively low temp and pressure and needs superheating.

Boiling water reactor : (CBWR)

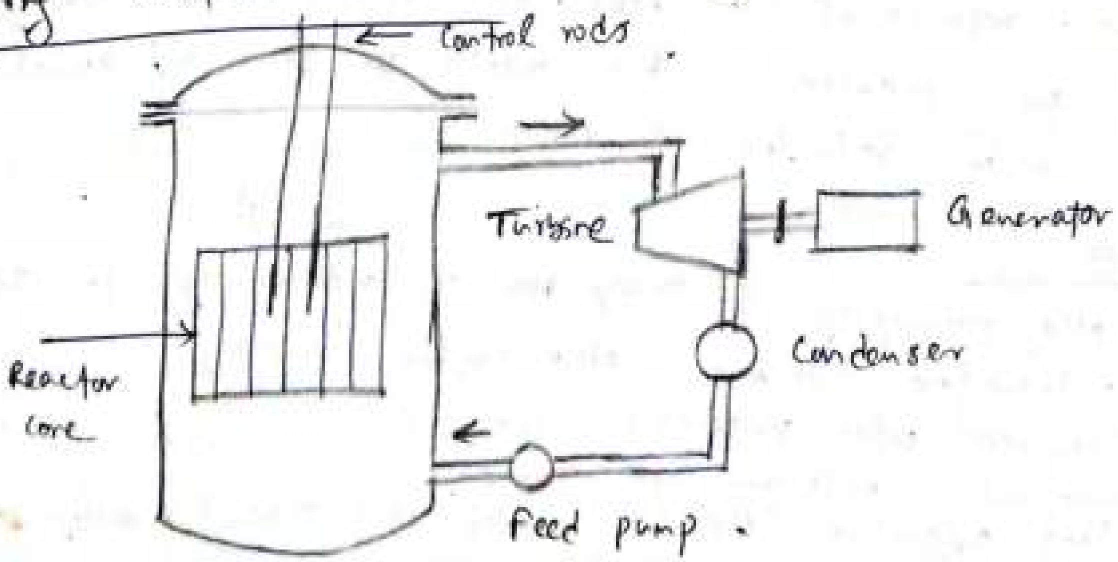

→ In this reactor enriched uranium (contains more fissionable isotope U^{235} than the naturally occuring % 0.7%.) is used as nuclear fuel and water is used as coolant.

→ water enters the reactor at the bottom. It takes up the heat generated due to the fission of the fuel and gets converted into steam,

→ steam leaves the reactor at the top and flows into the turbine. Water also serves as moderator.

→ India's first nuclear power plant at Tarapur has two reactors (each of 160 MW capacity) of BWR type.

→ In this reactor, ordinary (or light) water is the moderator and coolant as well as the neutron reflector.

→ The system pressure is high but not as high as in a PWR. so that water boils and steam is generated within the reactor core.

→ This is also known as direct steam cycle as steam is produced in the reactor itself instead of a heat exchanger.

Advantages:

1. As the steam is directly generated in this reactor, the thermal efficiency of this plant is higher (about 30%.) than PWR
2. The capital cost is lower as the reactor vessel is designed to take low stresses as the pressure in the vessel is lower than PWR.
3. The reactor is capable of meeting the fluctuating load requirements
4. As the requirement of heat exchangers, pumps and auxiliary equipment are reduced. this results in gain in thermal efficiency with reduction in cost.

Disadvantages:

→ There is also possibility of carry over of radioactivity to steam equipment. Therefore, turbine also require shielding.

→ More elaborate safety precautions needed.

→ More biological protection is required.

→ On part load operation, there is wastage of steam resulting in lowering of thermal efficiency.

11.4 SITE SELECTION

In taking a decision on locating a new nuclear power plant, the following points have to be kept in view:

1. *Availability of water.* At the power plant site an ample quantity of water should be available for condenser cooling and make up water required for steam generation. Therefore the site should be nearer to a river, reservoir or sea.
2. *Distance from load centre.* The plant should be located near the load centre. This will minimise the power losses in transmission lines.
3. *Distance from populated area.* The power plant should be located far away from populated area to avoid the radioactive hazard.
4. *Accessibility to site.* The power plant should have rail and road transportation facilities.
5. *Waste disposal.* The wastes of a nuclear power plant are radioactive and there should be sufficient space near the plant site for the disposal of wastes.
6. *Safeguard against earthquakes.* The site is classified into its respective seismic zone 1, 2, 3, 4, or 5. The zone 5 being the most seismic and unsuitable for nuclear power plants. About 300 km of radius area around the proposed site is studied for its past history of tremors, and earth-quakes to assess the severest earth-quake that could occur for which the foundation building and equipment supports are designed accord-

ingly. This ensures that the plant will retain integrity of structure, piping and equipments should an earthquake occur. The site selected should also take into account the external natural events such as floods, including those by up-stream dam failures and tropical cyclones.

7. *Foundation condition.* The substrata must be strong enough to support the heavy reactor which may weigh as high as 100,000 tons and imposed nearing pressure of around 50 tons per square meter. Therefore, it is necessary to select a site with good foundation conditions to avoid the dangers of different settlements.

The most important consideration in selecting a site for a nuclear power plant is to ensure that the site-plant combination does not pose radiological or any hazards to either the public, plant personnel on the environment during normal operation of plant or in the unlikely event of an accident.

The Atomic Energy Regulatory Board (AERB) has stipulated a code of practice on safety in Nuclear Power Plant site and several safety guidelines for implementation.

In order to study prospective sites for a nuclear power plant the Department of Atomic Energy (DAE) of our country appoints a site selection committee with experts from the following:

(*i*) Central Electricity Authority (CEA).
(*ii*) Atomic Minerals Division (AMD).
(*iii*) Health and safety group and the Reactor Safety Review group of the Bhabha Atomic Research Centre (BARC).
(*iv*) Nuclear Power Corporation (NPC).

The committee carries out the study of sites proposed. The sites are then visited, assessed and ranked. The recommendations of the committee are then forwarded to DAE and the Atomic Energy Commission (AEC) for final selection.

The trend is to locate a number of units in a cluster at a selected site. The highest rated units in India are presently of 500 MW. The radiation dose at any site should not exceed 100 milligram per member of the public at 1.6 km boundary.

11.19 INDIA'S 3-STAGE PROGRAMME FOR NUCLEAR POWER DEVELOPMENT

The nuclear energy programme in India has been visualised to grow in following three phases:

Phase 1—Construction of natural uraniun fueled, heavy water moderated and heavy water cooled thermal reactors producing electricity and plutonium.

Phase 2—Construction of FBRs which utilize plutonium and depleted uranium, the byproducts of phase-1 reactors. FBRs produce more fuel than they consume while supplying electricity.

Phase 3—Use of thorium by converting it to uranium.

11.20 SAFETY MEASURES FOR NUCLEAR PLANTS

Nuclear power plants should be located far away from the populated area to avoid the radioactive hazard. A nuclear reactor produces α and β particles, neutrons and γ-quanta which can disturb the normal functioning of living organisms. Nuclear power plants involve radiation leaks, health hazard to workers and community, and negative effect on surrounding forests.

At nuclear power plants there are three main sources of radioactive contamination of air:

(*i*) Fission of nuclei of nuclear fuels.

(*ii*) The second source is due to the effect of neutron fluxes on the heat carrier in the primary cooling system and on the ambient air.

(*iii*) Third source of air contamination is damage of shells of fuel elements.

This calls for special safety measures for a nuclear power plant. Some of the safety measures are as follows:

(*i*) Nuclear power plant should be located away from human habitation.

(*ii*) Quality of construction should be of required standards

(*iii*) Waste water from nuclear power plant should be purified.

The water purification plants must have a high efficiency of water purification and satisfy rigid requirements as regards the volume of radioactive wastes disposed to burial.

(*iv*) An atomic power plant should have an extensive ventilation system. The main purpose of this ventilation system is to maintain the concentration of all radioactive impurities in the air below the permissible concentrations.

(*v*) An exclusion zone of 1.6 km radius around the plant should be provided where no public habitation is permitted.

(*vi*) The safety system of the plant should be such as to enable safe shut down of the reactor whenever required. Engineered safety features are built into the station so that during normal operation as well as during a severe design basics accident the radiation dose at the exclusion zone boundary will be within permissible limits as per internationally accepted values.

Adoption of a integral reactor vessel and end shield assemblies, two independent shut down systems, a high pressure emergency core cooling injection system and total double containment with suppression pool are some of the significant design improvements made in Narora Atomic Power Project (NAPP) design. With double containment NAPP is able to withstand seismic shocks.

In our country right from the beginning of nuclear power programme envisaged by our great pioneer Homi Bhabha in peaceful uses of nuclear energy have adopted safety measures of using double containment and moderation by heavy water one of the safest moderators of the nuclear reactors.

(*vii*) Periodical checks be carried out to check that there is no increase in radioactivity than permissible in the environment.

(*viii*) Wastes from nuclear power plant should be carefully disposed off. There should be no danger of pollution of water of river or sea where the wastes are disposed.

In nuclear power plant design, construction, commissioning and operation are arrived out as power international and national codes of protection with an over-riding place given to regulatory processes and safety of plant operating personnel, public and environment.

11.21 NUCLEAR WASTE MANAGEMENT

Waste disposal problem is common in every industry. Wastes from atomic energy installations are radioactive, create radioactive hazard and require strong control to ensure that radioactivity is not released into the atmosphere to avoid atmospheric pollution.

The wastes produced in a nuclear power plant may be in the form of liquid, gas or solid and each is treated in a different manner.

Liquid Wastes. The disposal of liquid wastes is done in two ways:

(*i*) *Dilution.* The liquid wastes are diluted with large quantities of water and then released into the ground. This method suffers from the drawback that there is a chance of contamination of underground water if the dilution factor is not adequate.

(*ii*) *Concentration to small volumes and storage.* When the dilution of radioactive liquid wastes is not desirable due to amount or nature of isotopes, the liquid wastes are concentrated to small volumes and stored in underground tanks. The tanks should be of assured long term strength and leakage of liquid from the tanks should not take place otherwise leakage or contents, from the tanks nay lead to significant underground water contamination.

Gaseous Wastes. Gaseous wastes can most easily result in atmospheric pollution. Gaseous wastes are generally diluted with air, passed through filters and then released to atmosphere through large stack (chimneys).

Solid Wastes. Solid wastes consist of scrap material or discarded objects contaminated with radioactive matter. These wastes if combustible are burnt and the radioactive matter is mixed with concrete, drummed and shipped for burial. Non-combustible solid wastes, are always buried deep in the ground.

13

Hydro-Electric Power Plants

13.1 INTRODUCTION

Water is the cheapest source of power. It served as the source of power to our civilizatio in its earlier days in the form of water wheels. Faraday's discovery of electricity has proved to be very useful to use water for producing electric power. A hydro-electric power plant is aimed at harnessing power from water flowing under pressure.

Hydro or water power is important only next to thermal power. Nearly 30% of the total power of the world is met by hydro-electric power. This was initiated in India in 1897 with a run of river scheme near Darjeeling. The first major hydro-electric development of 4.5 MW capacity named as Sivasamudram Scheme in Mysore was commissioned in 1902. In 1914 a hydro power plant named Khopoli project of 50 MW capacity was commissioned in Maharashtra. Up to 1947 the hydro power capacity was about 500 MW.

Water power has some inherent advantages as follows:

(i) Running cost of hydro power plant is low as compared to steam power plant or nuclear power plant of same capacity.

(ii) The hydro plant system reliability is greater than that of other power plants.

(iii) The hydraulic turbines can be put off and on in matter of minutes. Nuclear power plants and steam power plants lack this facility.

(iv) Modern hydropower plant equipment has a greater life expectancy which is about 50 years or more whereas as nuclear power plant has an effective life about 30 years.

(v) Steam power plants have problem of ash disposal whereas hydro power plants have no comparable problem.

(vi) Modern hydro generators give very high efficiency over a considerable range of load.

Although the capital investment of a hydro-electric power plants is more but the operating cost of this plant is minimum as compared to other power plants and power produced by this plant is cheaper than the power generated by other power plants using coal, oil etc. Besides power generation this plant is quite useful for irrigation and flood control. This plant can be used both as base load plant and peak load plant.

A schematic diagram of hydro-electric power plant is shown in Fig. 13.1. Water surface in the storage reservoir is known as head race level or simple head race. Penstocks or canals are used to bring water from the dam of the turbines fitted in the power house which is built at some lower level. Penstocks are made up of steel, wood or reinforced concrete. Water centers the turbine through the inlet valve. Hydraulic turbines convert the potential energy of water into mechanical energy. The mechanical energy developed by the turbine is used in running the electric generator which is directly coupled to shaft of the turbine.

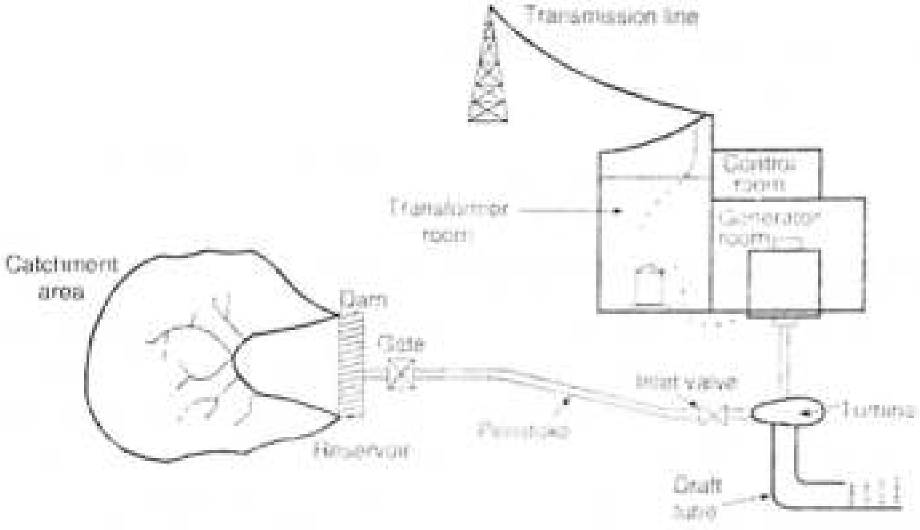

Fig. 13.1. Layout of hydro power plant.

Water power can be divided into two types as follows:

(i) Primary or firm power *(ii)* Secondary or surplus power.

Primary power is the power corresponding to minimum stream flow with due consideration to the effects of poundage and load factor. It is the power always available to supply the load. The secondary power is available only when quantity of water and storage are sufficient.

Hydro power is a conventional renewable source of energy which is clean, free from pollution and generally having good environmental effect. The pace of utilization of hydro potential during the last decades has been slow compared to total energy development. Large investments, long gestation period and increased cost of power transmission are major obstacles in the utilisation of hydro power resources.

Hydro power is important next to thermal power. About 30% of total power of the world is met by hydro electric power plants. The total hydro potential of the world is about 5000 GW. There are some countries in the world where almost entire power generation is hydro-based. For example in Norway the hydropower forms 99% of total installed capacity.

Power output from a hydro power plant depends on the following three factors:

(i) Head *(ii)* Efficiency *(iii)* Discharge.

Power generation mainly depends upon the quantity of water available.

When rain water falls over the earth's surface it possesses potential energy relative to the oceans towards which it flows. This energy can be converted to shaft work where the water drops through an appreciable vertical distance. As water falls , its potential energy is converted into kinetic energy and then kinetic energy is converted to the mechanical energy by allowing the water to flow through the hydraulic turbine runner. This mechanical energy is then utilised to run an electric generator which is coupled to the turbine shaft.

The power developed can be calculated by using the following formula,

$$\mathrm{HP} = \frac{W\,Q\,h}{75} \times \eta$$

where,

W = Specific weight of water in kg/m^3 (=1000)
Q = Rate of water flow in m^3/sec.
h = Height of fall or head in m.
η = Efficiency of conversion of potential energy into kinetic energy.

13.2 APPLICATION OF HYDRO-POWER PLANTS

Hydro electric power plant can be used as independent power plant. But this will require large amount of water to be stored and at the times of low water flows the hydro power plant will not be able to meet the maximum load as otherwise the maximum capacity of the station has to be based on the maximum flow of water and this will not prove to be economical. Therefore, the present trend it to use hydro electrical power with a steam power station in an interconnected system. This will result in reduction in capital cost of hydro electric power plant as the size of reservoir may be reduced. In the interconnected system at times of low water flows the hydro-power plant can be used as peak load plant and base load should be supplied by steam power plant whereas during periods of high water flows the steam plants and hydro plants reverse their roles, the hydro power plant taking the base load and steam power plant supplying the peak load.

Following are the major applications of hydro plants (multi-purpose hydro power projects):

1. Generation of electric power
2. Storage of irrigation water.
3. To control the floods in the rivers.
4. Storage of drinking water supply.
5. Navigation.
6. Fish and wildlife development
7. Recreation etc.

When two or more of the above uses of water are combined together while designing a multipurpose project, increased benefits without a proportionate increase in the costs may be obtained, thus enhancing justification of the project.

13.3 ADVANTAGES HYDEL POWER PLANTS

Advantages

The major factor which go in favour of hydro-electric power plant are as follows:

1. Water is the cheapest and reliable source of generation of electric power because it exists as a free gift of nature.
2. There are no ash disposal problems. Also the atmosphere is not polluted because no smoke is produced in this plant.
3. No fuel transportation problem.
4. It can take up the loads quickly and it is capable of meeting the variable loads without any loss in efficiency.
5. Its maintenance cost is low.
6. It requires less supervising staff.
7. Auxiliaries needed in the plant are less as compared to steam plant of equal size.
8. Running cost of the plant is low.
9. In addition to the power generation such plants are used for irrigation and flood control purposes also.
10. Hydro electric power plants have become economic competitors with steam power plants and will acquire more economic advantage with the rise in price of coal and oil.
11. The life of the plant is more and the effect of age is comparatively small on the overall efficiency of the plant.
12. These can be started and stopped very quickly.
13. Unforeseen outages are less frequent.
14. Plant has no standby losses.
15. As no fuel is required, no expenditure on material, material handling, storage and disposal of waste.

Disadvantages

The various disadvantages are as follows :

1. The power produced by the plant depends upon quantity of water which in turn is dependent upon the rainfall, so if the rainfall is in time and proper and the required amount of water can be collected, the plant will function satisfactorily otherwise not.
2. Hydro-electric plants are generally situated away from the load centres. They require long transmission lines to deliver power. Therefore, the cost of transmission lines and losses in them will be more.
3. Initial cost of the plant is high.
4. It takes fairly long time for the erection of such plants.

13.3.1 Comparison of Hydro Electric Power Plant and Steam Power Plant

1. The initial cost (of land, dam, diversion works, water rights, rail, road and generating plant) of a hydro electric power plant is nearly twice (or more) as that of steam power plant of equal size; but the labour, maintenance and repair costs of hydro-plant are much less than the stream power plant. In hydro-plant the cost of dam and waterways constitute the major portion of plant costs. Depending upon the conditions the cost of a hydroplant vary from Rs. 5 Crs. to 7 Crs..
2. For preliminary estimates the fixed charges for the hydro-power station usually vary from 9 to 12%.

Interest	6%
Depreciation	2%
Taxes and insurance	1%
Total	9%

The fixed charged for a steam power plant are higher and may be assumed from 12 to 14%. This is because of greater proportion of equipment and machinery costs and the depreciation charges are relatively high.

3. It is easy to locate steam power plant near the load centre and this eliminates the need for long transmission lines and thus transmission cost is less whereas power generated by a hydro plant is to be transmitted over longer distance and hence at greater cost.
4. The time to put the most steam power stations into operation is nearly 5 to 8 hours whereas a hydro electric power plant can be put into operation in very short time ranging from few seconds to 3 or 5 minutes. Thus where power is to be supplied both by hydroelectric power plant and steam power plant, the steam power plant should be used as base load plant and hydro-power plant should be used as peak load plant.
5. The efficiency of steam power plant drops as it gets older.
6. Steam power station can be operated as desired to suit the demand of the load system whereas power to be generated from hydro-plant is dependent on the quantity of water available in the storage.
7. The cost of transportation of fuel is quite high in case of steam power plant.
8. As compared to steam power plant the hydro-electric generation is the cleanest and most simple.

13.4 SELECTION OF SITE

The ideal site will be one where the dam will have the largest catchment area to store water at high head and will be economical in construction.

The various factors to be considered while selecting the site for hydro-electric power plant are as follows:

1. *Water available.* Geological, geographical and meteorological conditions of the site should be studied thoroughly. Daily, weekly and monthly flow water over a period of years should be recorded. Estimate should be made about the average quantity of water available throughout the year and also about maximum and minimum quantity of water available during the year. These factors are necessary to decide the capacity of the hydro-electric plant, setting up of peak load plant such as steam, diesel or gas turbine plant and to provide adequate spillways or gate-relief during the flood period.
2. *Storage of water.* Water used in the hydro electric power plant is mainly dependent on the rain and since the rainfall is not regular throughout the year, therefore, it is essential to store water to afford a uniform output. Thus a storage reservoir is constructed at the site. During rainy season the excess water is stored in the reservoir and it is released to supplement low rates of flow during run-off periods to maintain the output. The reservoir should have large catchment area so that water in it should

never fall below the minimum level.

3. *Head of water.* Water in large quantities and at a sufficient head should be available. For a given power output an increase in effective head reduces the quantity of water required to be passed through the turbines.
4. *Distance from Load Centre.* It is desirable that the power plant should be set up near the load centres, so that costs of erection of the transmission lines and their maintenance are low. However, in hydro-electric power plants it may not be possible because this plant will be located where sufficient quantity and head of water is available.
5. *Accessibility of the site.* The site selected should have rail and road transportation facilities.
6. *The land of site should be cheap and rocky.* The ideal site will be one where the dam will have the largest catchment area to store water at a high head and will be economical in construction. After the location has been chosen the exact position of the various structures are fixed by considering the following factors:
   (*a*) Details of foundation conditions
   (*b*) Requirements of head, flow demands of storage capacity
   (*c*) Arrangement and type of following:
      (*i*) Dam
      (*ii*) Intake system
      (*iii*) Conduits
      (*iv*) Surge tanks
      (*v*) Power house
   (*d*) Cost of dam and project
   (*e*) Transport facilities and accessibility of site.

13.6.1 Capacity of Water Flow Regulation

(a) Run of River Plant

This type of power plant has no control over the river flow and uses the water as it comes. During the rainy season high water flow is available and if the power plant is not able to use this large flow of water some quantity of water is allowed to flow over dam spillways as waste. Whereas during dry season, due to low rates of water, the power produced by such plants will be low. It is shown in Fig. 13.2

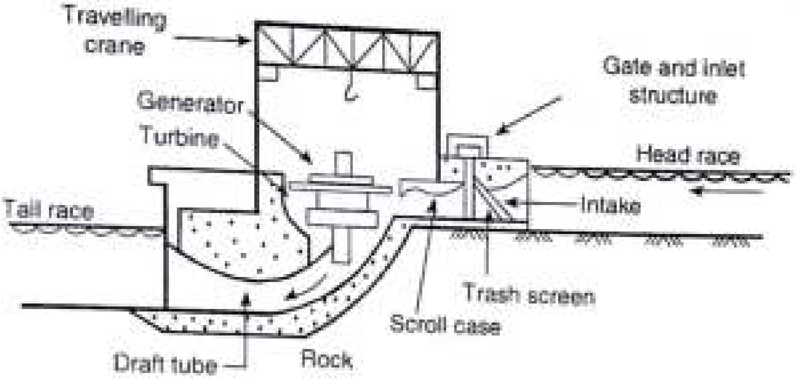

Fig. 13.2 Run of river plant.

(b) Storage Plant

This type of power plants has facilities for storing water. During rainy seasons the excess water is stored in the reservoir and it is released to supplement low rates of flow during run off (dry) periods. The advantage of this plant is that the power generated by the plant during dry season will not be affected.

(c) Pumped storage plant

Pumped storage plant (Fig. 13.3) in combination with hydro electric power plant is used for supplying the sudden peak load of short duration. The water leaving the turbines of hydro electric power plant is stored in tail—race pond. This water is pumped back to the head race reservoir by means of reversible pump turbine sets and is used for power generation at the peak load time. Pump storage plants are generally inter connected with other plants such as steam power plants. The off peak capacity of steam power station can be used for pumping water in the head reservoir.

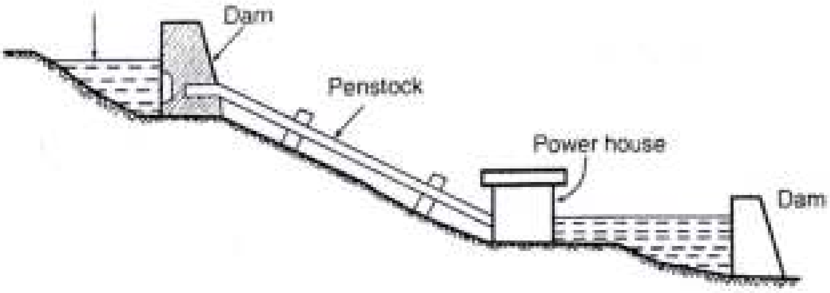

Fig. 13.3. Pump storage plant.

A 400 MW pumped stored plant is at design stage at Kadamparai in Tamil Nadu. This will be built with the existing upper Aliyer Reservoir at the lower pool, the higher pool being constructed at Kadamparai river. There will be four 100 MW reversible units in an underground power house.

Advantages of pumped storage plants are as follows:

(*i*) The capital cost of pumped storage plant is low as compared to other peaking units.

(*ii*) There is a great deal of flexibility in the operational schedules of the system.

(*iii*) A pumped storage plant can pick up load rapidly and is dependable.

(*iv*) They operate at higher load factors and improve the overall efficiency of the system. They are used as peak load plants.

Fig.13.4 shows the pumped storage power plant for peak load in conjunction with steam power plant as base load plant.

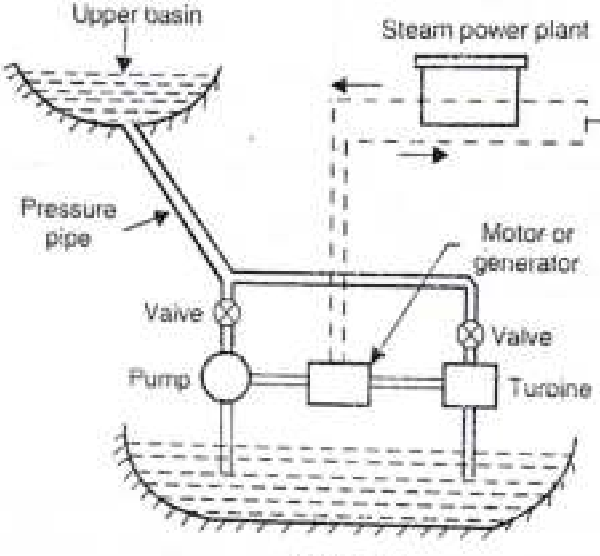

Fig. 13.4

13.6.2. Availability of Head of Water

According to head of water available the hydro-electric power plants can be classified as follows:

(*a*) *Low Head Plant.* When the operating head is less than 15 metres the plant is named as low head plant. This type of plant uses vertical shaft Francis turbine or Kaplan turbine. A small dam is built to provide necessary head. A low head plant (canal water power plant) is shown in Fig.13.5

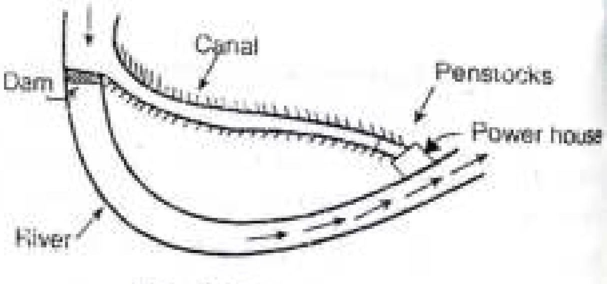

Fig. 13.5. Low head plant

(*b*) *Medium Head Plant.* When the operating head of water is from 15 to 50 metres the power plant is called medium head power plant. This type of plant uses Francis turbines. The forebay provided at the beginning of penstock serves as water reservoir. The forebay draws water from main reservoir through a canal or tunnel. Forebay also stores the rejected water when the load on the turbine decreases (Fig.13.6).

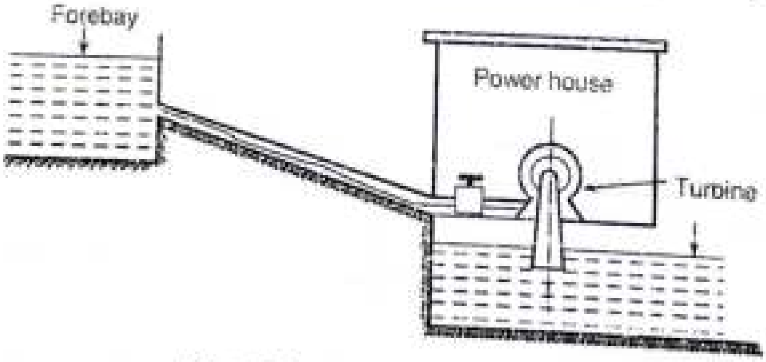

Fig. 13.6. Medium head plant.

(c) *High Head Power Plant.* When the head of water exceeds 50 metres the plant is known as high head power plant. A surge tank is attached to the penstock to reduce the water hammer effect on the penstock. Pelton turbines are used in such power plants. Fig. 13.7 shows a high head power plant.

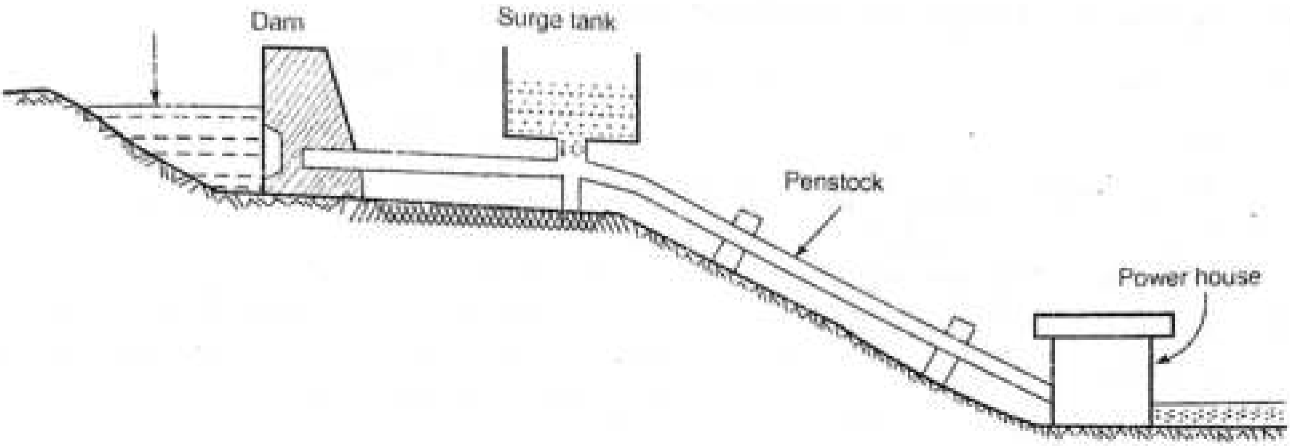

Fig. 13.7. High head plant

Following are the main component parts of a high head hydroelectric power plant.

(i) Reservoir (ii) Dam

(iii) Intake structure such as (a) Control gates (b) Screen

(iv) Penstock (v) Surge tank

(vi) Power house (vii) Tail race channel.

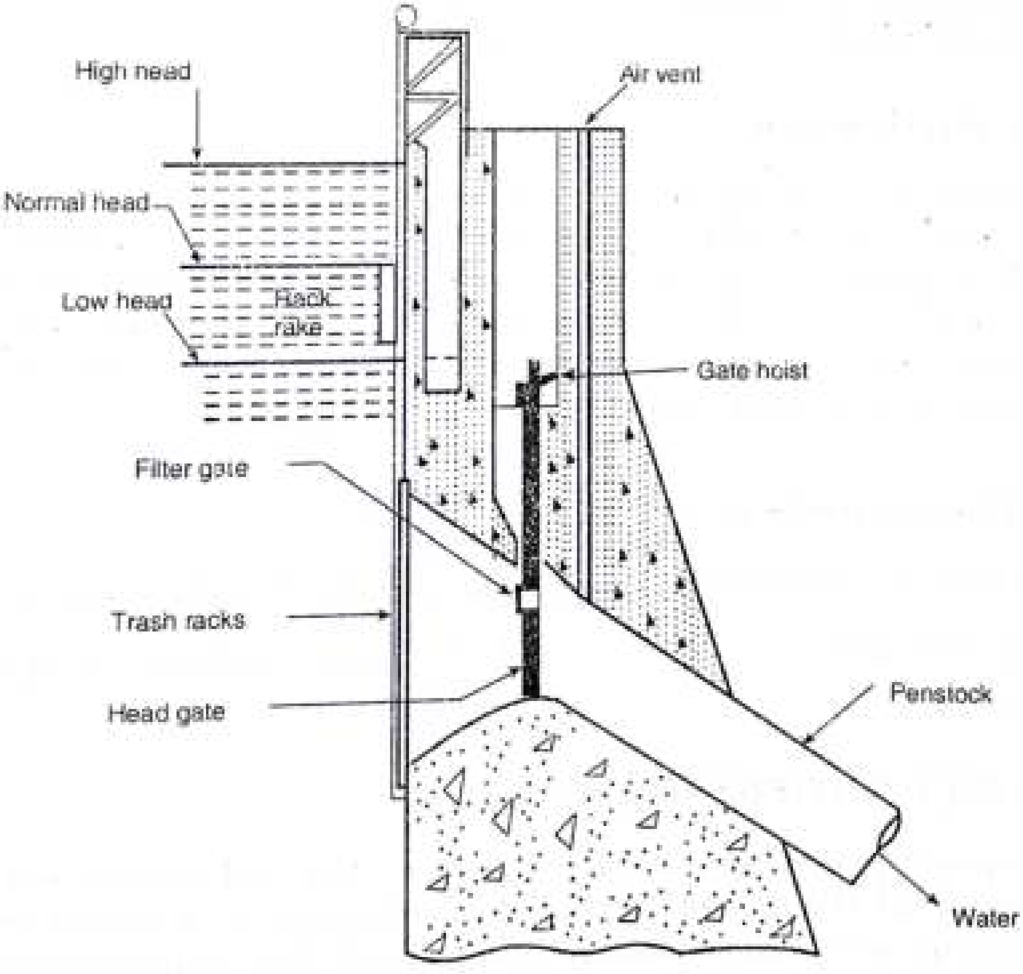

Fig. 13.8 High pressure intake head works.

Fig.13.8 shows a typical high pressure intake head works. Trash racks remove floating or submerged debris directly at the intake entrance. Filter gate balances water pressure for opening the gate whereas air vent prevents penstock vacuum.

13.6.3. Nature of Load (or basis of operation)

Hydro-power plants are classified on the basis of load supplied as:

(a) Base load plants, and *(b)* Peak load plants,

(a) **Base load plants.** A plant supplying base load, which is more or less constant, is known as base load plant. In such plants, generating units work on almost constant load and their operating efficiency is usually high.

(b) **Peak load plants.** The plants which meet the fluctuating peak loads are called peak load plants. Generally, hydro power is most suitable for peak load durations due to its quick starting and relatively easy in picking up the load.

13.6.4. Plant Capacity

Hydro-power plants based on the capacity can be classified as under:

(i)	Micro hydel plants	upto 100 kW
(ii)	Mini hydel plants	From 101 upto 2000 kW
(iii)	Small hydel plants	From 2 MW upto 25 MW
(iv)	Medium capacity hydel plants	From 25 MW to 100 MW.
(v)	High capacity hydel plants	From 100 MW to 1000 MW
(vi)	Super hydel plants	above 1000 MW.

13.6.5. Storage and Pondage

The low head plants, that need to have a balancing reservoir to cater for short term fluctuations, are provided with a pond near the power house. In run-of-river plants, the main weir itself provides on its up stream side of the required pondage. While in diversion canal plants, the pond is required to be created at the end of the canal in the form of a forebay reservoir. Whereas, the storage reservoir provide storage of water for long term requirements, pondage take care of the hour-to-hour fluctuations over a day or occasionally.

13.6.6 Turbine Characteristics

Hydel plants can be classified according to the turbine characteristics as:

(a) High specific speed, *(b)* Medium specific speed, and
(c) Low specific speed.

13.7 MINI AND MICRO HYDRO POWER PLANTS

Micro hydro power plants (upto 100 kW capacity), mini hydro power plants (upto 2 MW) and small plants (up to 25 MW) can be successfully used for electrification of isolated pockets of villages where the transmission system cannot easily reach. This includes exploitation of mountain streams rivulets and canal drops. The power from mini-hydro power plants and micro-hydro power plants will be attractive as the energy generated can be consumed near the source itself without a big network of sub transmission systems.

Micro/mini hydro development is an extremely valuable, economic, renewable energy source in its endeavour to meet decentralised rural need of the country.

The potential in small hydro-electric projects in various countries ranges from 5 to 15% of the total hydro-potential of that country. In India the estimated hydro energy potential of micro/ mini hydro power plants leads to an installed capacity of 10,000 MW spread over 5,000 to 6,000 schemes. Small hydro power plants (SHP) which generate electricity in small scale are now being developed. These power plants are an attractive renewable source of energy in remote and hilly regions isolated from main grids.

Various advantages of small hydro-power plants (SHP) are as follows:

(i) Readily accessible source of renewable energy.
(ii) Can be installed making use of water head as low as 2 m and above.
(iii) Does not involve setting up of large dams.
(iv) Least polluting.
(v) Limited initial investments and short gestation periods.
(vi) Reduced transmission losses.

The Indian Renewable Energy Development Agency (IREDA) is encouraging both public and private organisations to set up small/mini/ micro hydel power plants.

15.2 CLASSIFICATION OF TURBINES

Water turbine can be classified according to:

1. **The action of water on moving blades.** On this basis water turbines are classified into following two categories:

(a) *Impulse turbine.* Whole of the pressure energy in this turbine is first converted into kinetic energy. The wheel revolves in open air at atmospheric pressure when water strikes on the series of buckets, i.e. in these there is no difference of pressure at the inlet and outlet of the runner. As these turbines convert the velocity energy into mechanical energy, these are known as Impulse or velocity turbines.

(b) *Reaction turbine.* These operates on the basis of difference of pressure at the inlet and outlet of the turbine, hence these are known as reaction or pressure turbines. In this case entering water has pressure as well as kinetic energy and when it moves over the blades both the kinetic energy and pressure energy provides turning moment of the wheel.

2. **Name of the originator**. Turbines can also be classified on the basis of names of their inventor or originator, *e.g.* Pelton wheel, Turgo, Girard, Jonval, Banki impulse turbines and similarly Francis, Kaplan and Thomson reaction turbines.

3. **Head and quantity of water available**

(a) High head (above 200 m) and small quantity of water requires impulse turbine such as Pelton wheel.

(b) Medium head (between 30 to 200 m) and medium quantity of water requires reaction turbines such as Francis turbines.

(c) Low head (below 30 m) and large quantity of water requires reaction turbines such as Kaplan or Propeller turbines.

4. Disposition of shaft. Turbines may have either horizontal or vertical shafts. Generally Pelton wheels have horizontal and Francis and Kaplan turbines have vertical shafts. Vertical shaft turbines require lesser space, but horizontal shaft turbines are easily accessible.

5. Direction of flow of water in the runner

(a) In radial flow turbines water flows in radial direction. The flow may be inward or outward.

(b) In tangential flow turbines, water strikes the turner in the direction of tangent of the depth of rotation of the runner. Pelton wheel is an example of tangential flow turbine.

(c) In axial flow turbines water enters and leaves the runner in a direction parallel to the axis of the turbine shaft.

(d) In mixed flow turbines water enters radially and leaves the runner axially.

Flow directions of commonly used turbines are as under:

(i) Propeller and Kaplan Turbines - Axial flow.

(ii) Francis turbine - Radial inward or mixed flow

(iii) Pelton turbine- Tangential flow.

6. Specific speed. Specific speed of a turbine is the speed of a geometrically similar turbines which would develop one H.P. under a head of 1 m. On this basis some of the important turbines have following specific speeds:

(a) Pelton wheel has specific speeds varying from 10 to 35 for single jet and upto 50 for double jet.

(b) Francis turbine has specific speeds varying from 50 to 300.

(c) Kaplan turbine has specific speeds varying from 300 to 1000.

Example 15.4. *A reaction turbine is supplied with 100 cu m of water per second and under a maximum head of 120 m at 350 R.P.M. Assuming overall efficiency of the plant 80% specific weight of water 1000 kg / m^3 ; calculate the horse power developed and power in kW.*

Solution.

$$H = 120 \text{ m}$$

$$\phi = 100 \text{ m}^3/\text{sec}$$

$$\omega = 1000 \text{ kg/m}^3$$

$$\eta = 0.8$$

$$\therefore \quad \text{Horse power developed} = \frac{\omega \phi H.\eta}{75} = \frac{1000 \times 100 \times 120 \times 0.8}{75} = 128{,}000$$

Power in kW = 128,000 × 0.746 = 95,488 kW. **Ans.**

Example 15.5. *(a) Calculate the total energy in kWh which can be generated from a hyd power station having following data :*

Reservoir area = 2.5 sq. km
Capacity = 5 × 10^6 m^3

Net head of water at the turbines = 80 m

Turbine efficiency = 80%

Generator efficiency = 90%

(*b*) *Also find by how many metre the level of reservoir will fall if a load of 20,000 kW is supplied for 5 hours?*

Solution (*a*) Work done/sec. $= 1000 \times 5 \times 10^6 \times 80$ kg m/sec.

$= 40 \times 10^{10}$ kg m/ sec.

H.P. Developed $= \dfrac{40 \times 10^{10} \times 0.8 \times 0.9}{75} = 0.38 \times 10^{10}$

Energy produce kW sec $= 0.38 \times 10^{10} \times 0.746 = 0.28 \times 10^{10}$

Energy produced (kWh) $= \dfrac{0.28 \times 10^{10}}{3600} = 7.78 \times 10^5$ kWh. **Ans.**

(*b*) Let the fall in level of reservoir = *h* metre

Time = 5 hours.

Area of reservoir = (2.5 × 1000 × 1000) sq. m.

Discharge /sec. $= \dfrac{2.5 \times 1000 \times 1000 \times h}{5 \times 3600} = \dfrac{10^4 \times h}{72}$

Work done /sec. $= \dfrac{1000 \times 10^4 \times h \times 80}{72}$

H.P. developed $= \dfrac{1000 \times 10^4 \times h \times 80}{72 \times 75} \times 0.8 \times 0.9$

kW produced $= \dfrac{1000 \times 10^4 \times h \times 80 \times 0.80 \times 0.9}{72 \times 75} \times 0.746$

$= 1.05 \times 10^5 \times h$

But kW produced = 20,000 (given)

$\therefore$ $20{,}000 = 1.05 \times 10^5 \times h$

$h = 0.2$ metre. **Ans.**

Example 15.6. *For a hydroelectric power plant the following data is supplied:*

Annual rainfall = *1000 mm.*

Catchment area = *120 sq.km.*

Effective head = *250 m.*

Load factor = *40%*

Yield factor to allow for run-off and evaporation loss = *50%*

Efficiency of power plant = *70%*

Determine the following:

(a) Average power produced.

(b) Capacity of the power plant.

Solution. (*a*) Volume of water available per year = Catchment area × Annual rain
Yield factor.

Now catchment area $= 120$ sq. km. $= 120 \times (1000)^2$ m^2

Annual rainfall $= \dfrac{1000}{10 \times 100} = 1$ metre

Volume of water available per year $= 120 \times (1000)^2 \times 1 \times 0.5$

Volume of water available per second

$$Q = \frac{120 \times (1000)^2 \times 0.5}{8760 \times 60 \times 60}$$

$\therefore$ H.P developed $= \dfrac{\omega.\phi H.\eta}{75}$

where ϕ = water available/sec.

$$= \frac{120 \times (1000)^2 \times 0.5}{8760 \times 60 \times 60}$$

ω = specific weight of water = 1000 kg/m^3
H = head = 250 metre
η = efficiency = 0.7
$\therefore$ k = yield factor = 0.5

H.P. developed $= \dfrac{1000 \times 120 \times (1000)^2 \times 250 \times 0.7 \times 0.5}{8760 \times 60 \times 60 \times 75}$

$$= \frac{35 \times 10^6}{876 \times 9} = 4328$$

$\therefore$ Average Power $= 4328 \times 0.746 =$ **3228 kW** **Ans.**

(*b*) Load factor $= \dfrac{\text{average power}}{\text{Maximum demand}}$

$\therefore$ Maximum demand $= \dfrac{\text{Average power}}{\text{Load factor}} = \dfrac{3228}{0.4} = 8070$ Kw.

The capacity of the power plant can be taken equal to maximum demand

$\therefore$ Capacity = **8070 kW.** **Ans.**

Example 15.7. *Calculate the power that can be developed from a hydro-electric p station having the following data:*

Catchment area = *100 sq.km.*

Average rainfall = *120 cm*

Run-off = *80%*

Available head = *300 m*

Overall efficiency of the power station = 75%.

Solution. Run-off available (ϕ)

$$= \frac{100 \times 10^6 \times 1.2 \times 0.8}{365 \times 24 \times 60 \times 60} = 3.4 \text{ cu m/sec.}$$

$$\omega = 1000 \text{ kg.}$$

(as 1 cu m of water weight = 1000 kg)

$$H = \text{Available head} = 300 \text{ m}$$

$$\eta = \text{Efficiency} = 0.75$$

H.P. developed $= \dfrac{\omega.\phi H \times \eta}{75} = \dfrac{1000 \times 3.4 \times 300}{75} \times 0.75$

Power in kW $= \dfrac{1000 \times 3.4 \times 300 \times 0.75 \times 0.746}{75}$

Power in MW $= \dfrac{1000 \times 3.4 \times 300 \times 0.75 \times 0.746}{75 \times 1000}$

$$= \frac{3.4 \times 300 \times 0.75 \times 0.746}{75}$$

= **7.48 MW. Ans.**

No two hydro power projects are exactly alike and each will have its own unique problems of design and construction. The choice of a particular type of a plant at a given site depends upon various factors, such as: topography of the area, available head, available flow, requirement of power, political influences in the area.

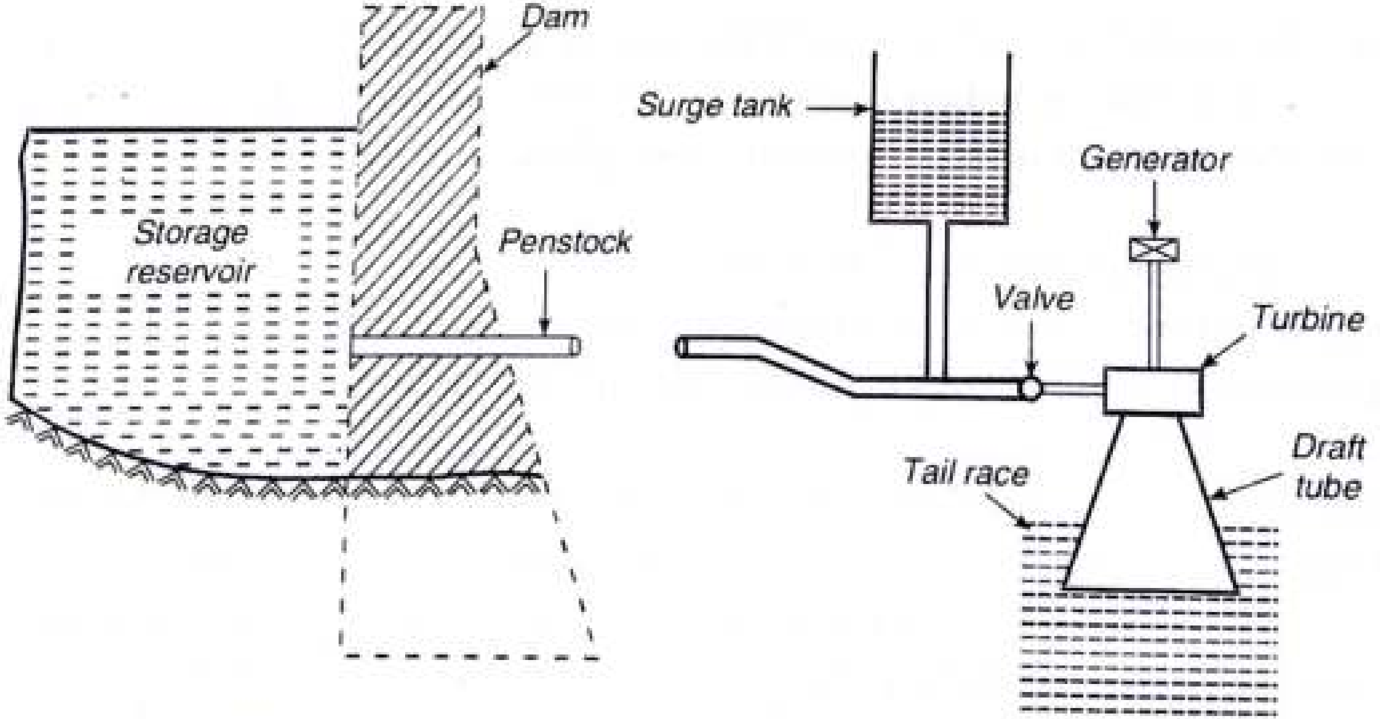

Fig. 14.1 Major components of hydro-electric plant.

A hydro-electric development scheme ordinarily includes a diversion structure, head works and a conduit (penstock) to carry water to the turbines, and governing mechanisms, generators, control and switching apparatus, housing for the equipment, transformers and transmission lines to the distribution centres. In addition to these major components, trash racks at the entrance of the penstock, canal and penstock gates, a forebay, a surge tank and other appurtenance may be required. A tailrace channel from the power house back to the river must be provided, if the power house is situated at such a place where the draft tubes cannot discharge water directly into the river.

Fig. 14.1 shows a flow diagram of typical hydro electric power plant. The essential components (or element) of such a plant are:

1. Catchment area
2. Storage Reservoir
3. Dam
4. Waterways : Canal, Forebay, Intake, Trash Rack
5. Penstocks
6. Surge tank
7. Draft tubes (Discussed in the chapter on hydel turbines)
8. Spillway
9. Powerhouse. Prime movers, Generators etc.
10. Tail race
11. Gates
12. Switchyard for transmission of power.

15.10 IMPULSE *VERSUS* REACTION TURBINE

S.N	*Impulse turbine*	*Reaction Turbine*
1.	In this all the available pressure head is converted into velocity head before striking on the buckets.	1. Only a part of the pressure head is converted into velocity head before striking on the runner vanes.
2.	As the water moves over the buckets, the pressure throughout remains atmospheric from inlet to exit.	2. The velocity and pressure both change during the flow over the vanes.
3.	The wheel must not run full.	3. The runner must run full in a closed conduit.
4.	The turbine must be placed above the tail race or at the foot of the fall.	4. It must be submerged in the tail race or can be placed above the foot of the fall by connecting the discharged end with the draft tube.
5.	The water may be admitted over part or whole of the wheel circumference.	5. The water must be admitted over the whole circumstance of the runner.
6.	Flow can be regulated without loss of efficiency.	6. There is always loss in efficiency.
7.	Work is done by the change in kinetic energy of the jet of water .	7. Work is done partly by the change in pressure head and partly by kinetic energy of the water in penstock.
8.	Component parts being easily accessible and repairs are easy.	8. Repairs are difficult.
9.	Running speeds are low. Therefore, for the same capacity, size of unit is large.	9. Running speeds are high. Therefore, for the same capacity, size of unit is small.

DIESEL ENGINE POWER PLANT:

→ Diesel engine power plants are installed where supply of coal and water is not available in sufficient quantity or where power is to be generated in small quantity or where stand by sets are required for continuity of supply such as in hospitals, telephone exchanges, radio stations and cinemas.

→ These plants in the range of 2 to 50 MW capacity are used as central stations for supply authorities & works and they are universally adopted to supplement hydroelectric or thermal stations where stand by generating plants are essential for starting from cold and under emergency conditions.

Advantages:

1- Design and installation very simple.
2. Can respond to varying loads without any difficulty.
3. The stand by losses are less.
4. Occupy less space.
5. Can be started and put on load quickly.
6. Require less quantity of water for cooling purposes.
7. Overall capital cost is less than steam plant.
8. Require less operating and supervising staff as that of steam plant.
9. The cost of civil eng. works is low.
10. Can burn wide range of fuels.
11. Can be located very near to the load centres,
12. No problem of ash handling.
13. Lubrication system is more economical.
14. They are more efficient than steam plant in the range of 150 MW capacity.

Disadvantages :

1. High operating cost.
2. High maintenance and lubrication cost.
3. Noise is a serious problem.
4. They are not economical where ~~noise~~ fuel has to be imported.
5. They can't supply overloads continuously.
6. Life of diesel power plant is quite small (2 to 5 years or less) as compared to that of steam plants (25 to 30 years).

Essential components of a diesel power plant :

1. Engine
2. Air intake system
3. Exhaust system.
4. Fuel system
5. Cooling system.
6. Lubrication system.
7. Engine starting system
8. Governing system.

① Fuel system :

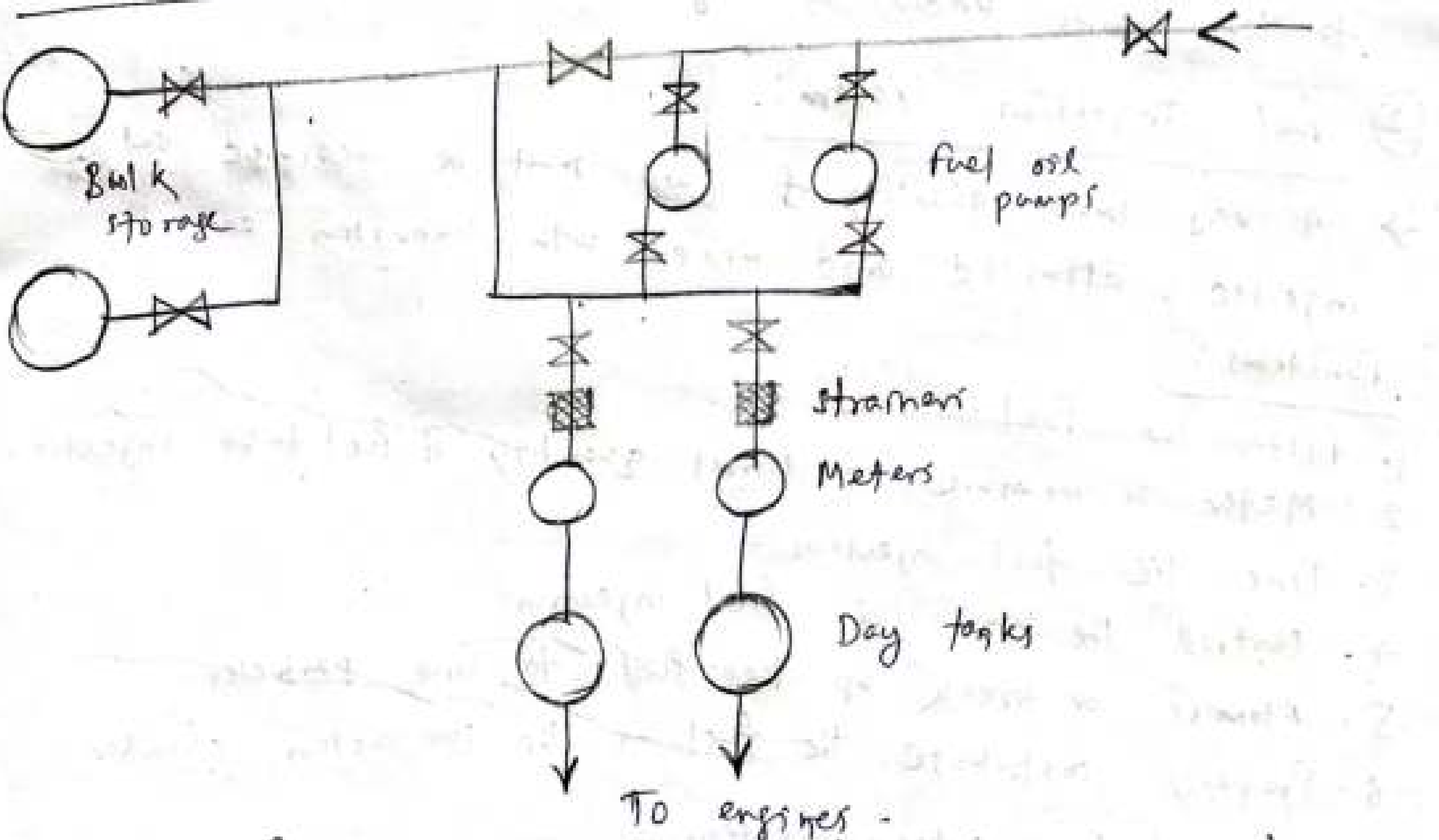

(System of fuel storage for a diesel plant)

→ The fuel oil may be delivered at the plant site by trucks, railroad tank cars and tankers.
→ From tank car or truck the delivery is through the

unloading facility to main storage tanks and then by transfer pumps to small service storage tanks known as engine day tanks.

→ Large storage capacity allows purchasing fuel when prices are low. The main flow is made workable and practical

- by arranging the piping equipment such as shut offs, drain lines, relief valves, strainers and filters, flow meters and temp. indicators, heaters.

→ Coils heated by hot water or steam reduce oil viscosity to lower pumping power needs.

→ The minimum storage capacity of atleast a month's requirement of oil should be kept in bulk.

→ Day tanks supply the daily fuel need of engines and may contain minimum of about 8 hours of oil requirement. These tanks are usually placed high so that oil may flow to the engines under gravity.

② Fuel Injection System:

→ A very small quantity of fuel must be measured out, injected, atomised and mixed with combustion air,

Functions:

1. Filter the fuel.
2. Meter or measure the correct quantity of fuel to be injected.
3. Time the fuel injection.
4. Control the rate of fuel injection.
5. Atomise or break up the fuel to fine particles.
6. Properly distribute the fuel in the combustion chamber.

Types of fuel injection System:

1. Common - rail injection system
2. Individual pump injection system.
3. Distributor.

1. Common-rail injection system:

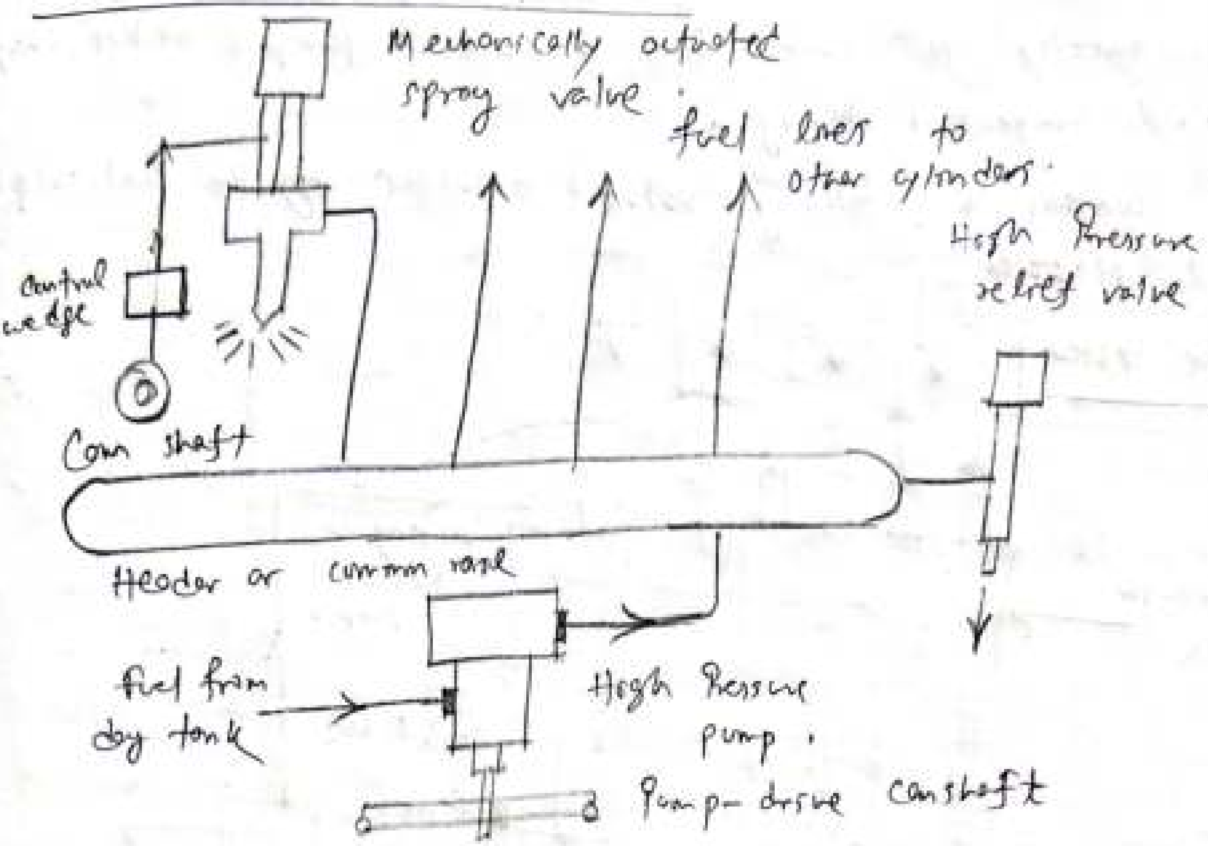

→ A single pump supplies high pressure fuel to header, a relief valve holds pressure constant.

→ The control wedge adjusts the lift of mechanical operated valve to set amount and time of injection.

→ Spring loaded spray valve acts as a check.

2. Individual Pump injection system:

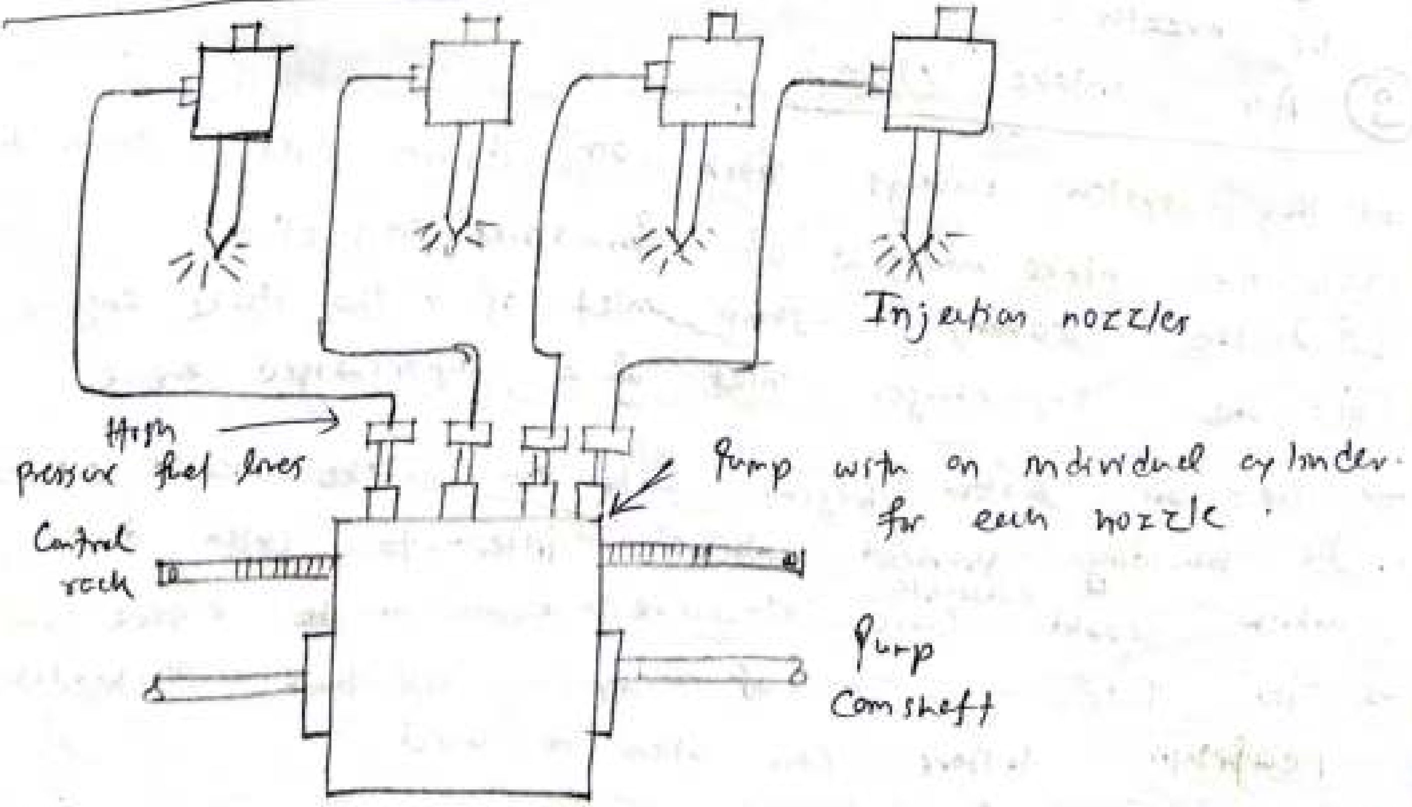

→ In this system an individual pump or pump cylinder connects directly to each fuel nozzle. Pump meters charge and control injection timing.

→ Nozzles contain a delivery valve actuated by the fuel oil pressure.

3. Distributor system

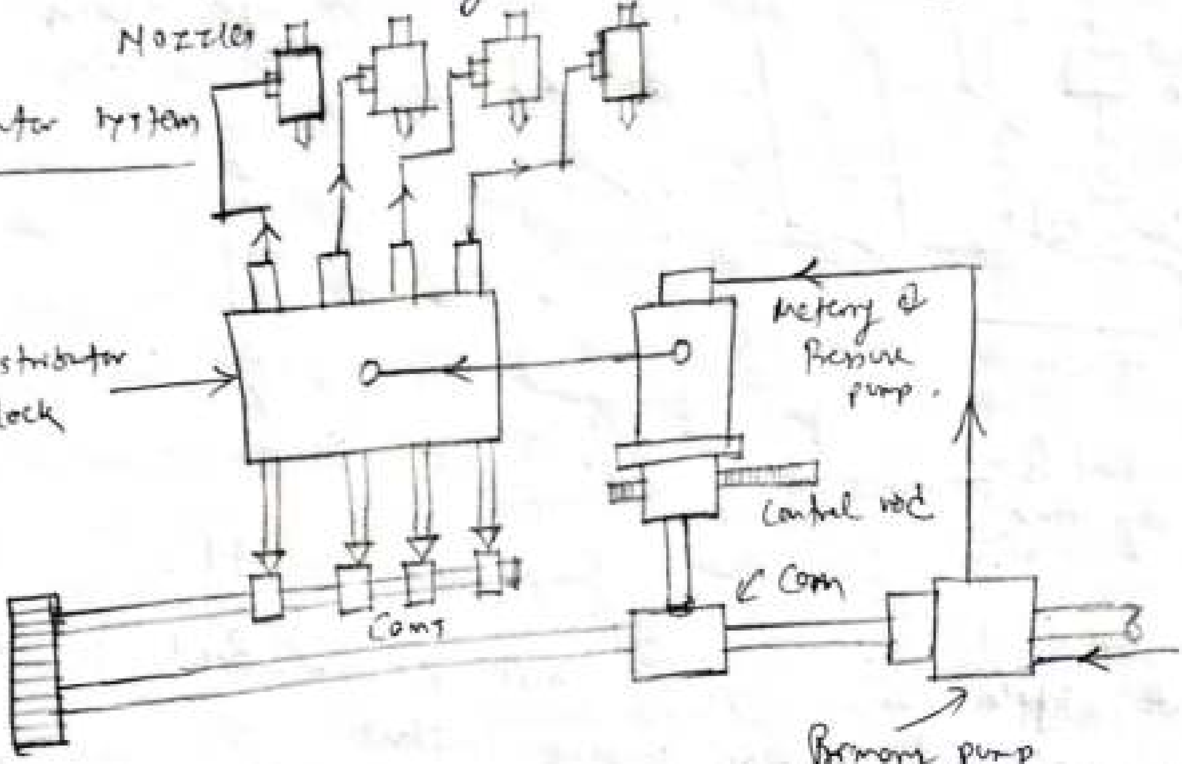

→ The fuel is metered at a control point; a pump pressurises, meters the fuel and times the injection. From here, the fuel is distributed to cylinders in correct firing order by cam operated poppet valves which open to admit fuel to the nozzles.

③ Air intake system :

→ This system conveys fresh air through pipes or ducts to

(i) Air intake manifold of four stroke engines,
(ii) The scavenging pump inlet of a two stroke engine.
(iii) The supercharger inlet of a supercharged engine.

→ The air system begins with an intake located outside the building provided with a filter to catch dirt which would otherwise cause excessive wear in the engine.

→ The filters may be of dry or oil bath. Electrostatic precipitator filters can also be used.

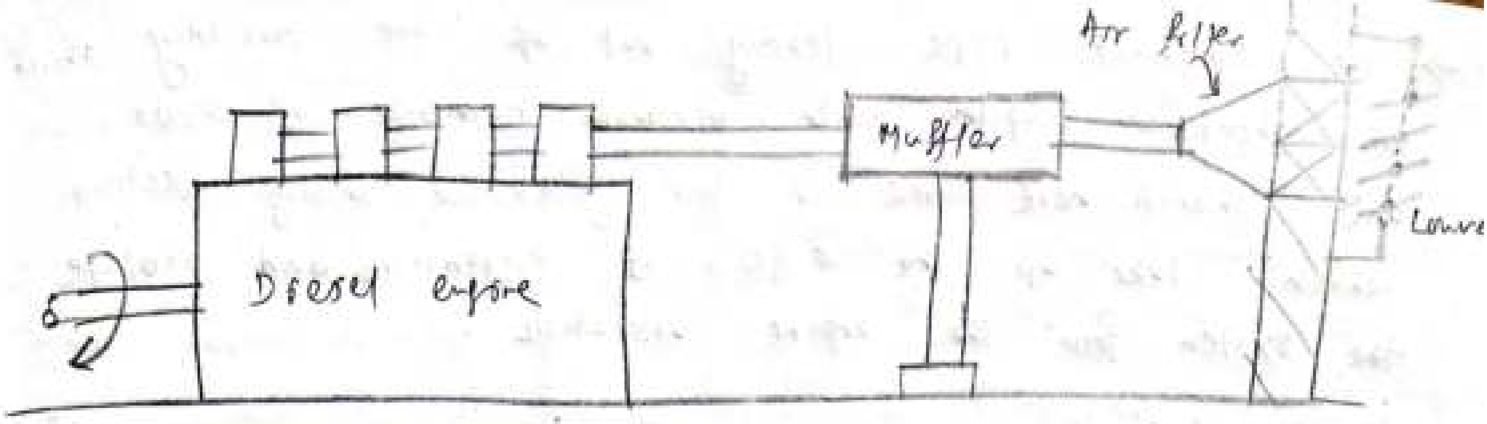

→ The dry type of filter is made of cloth, glass wool e

→ In oil bath type, the air is swept over a pool of oil so that the particles of dust become coated.

→ Light weight steel pipe is the material for intake ducts

→ In some cases, the engine noise may be transmitted back through the system to the outside air. In such cases, silencer is provided between the engine and the air intake.

④ Exhaust system:

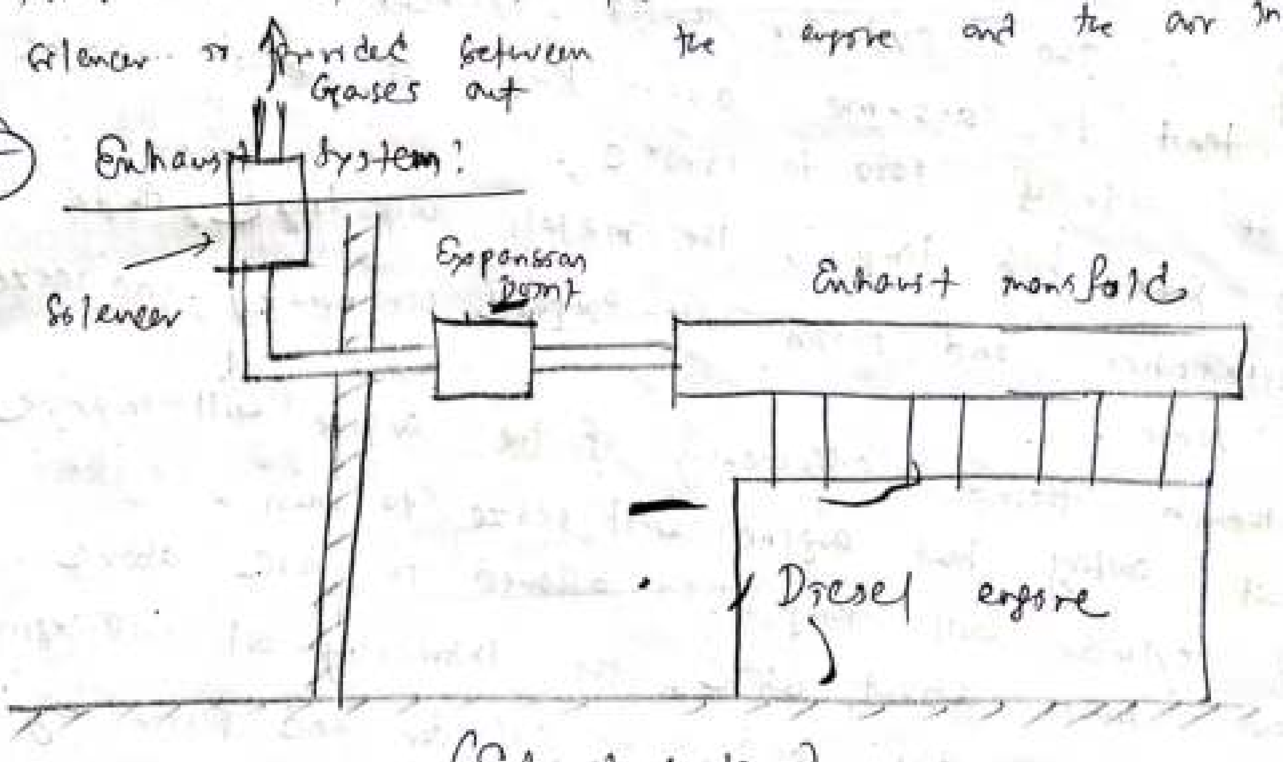

(Exhaust system)

→ The purpose of the exhaust system is to discharge the engine exhaust to the atmosphere outside the building

→ The exhaust manifold connects the engine cylinder exhausts outlets to the exhaust pipe which is provided with a muffler to reduce pressure in the exhaust line and eliminate most of the noise which may result if gases are discharged directly into the atmosphere.

→ The exhaust pipe leading out of the building should be short in length with minimum number of bends and should have one or two flexible tubing sections which take up the effects of expansion and isolate the system from the engine vibration.

Cooling system:

→ In an I.C. engine, the temp. of gases inside the cylinder may vary from 35° C or less to as high as 2750°C during the cycle.

→ If an engine is allowed to run without external cooling, the cylinder walls, cylinder and piston will tend to assume avg. temp. of gases may be of the order of 1000 to 1500° C.

→ At such high temp., the metals will loose their characteristics and piston will expand considerably and seize the liner.

→ Although thermal efficiency of the engine will improve without cooling but engine will seize to run.

→ If cylinder wall temp. is allowed to rise above certain limit, about 650°C, the lubricating oil will begin to evaporate rapidly and both cylinder and piston may be damaged.

→ Cooling system provided on an engine has the following reasons.

1. The even expansion of piston in the cylinder
2. High temp. reduce strength of piston and cylinder liner.
3. Over heated cylinder may lead to preignition of the charge in case of S.I. engine.
4. Physical and chemical changes may occur in lubricating oil which may cause sticking of piston rings and excessive wear

of cylinder.

→ Almost 25 to 35 % of total heat supplied in the fuel is removed by the cooling system.

→ Heat carried away by lubricating oil and heat lost by radiation amounts to 3-5 % of total heat.

→ There are mainly two methods of cooling in an I.C. engine.

1. Air Cooling:

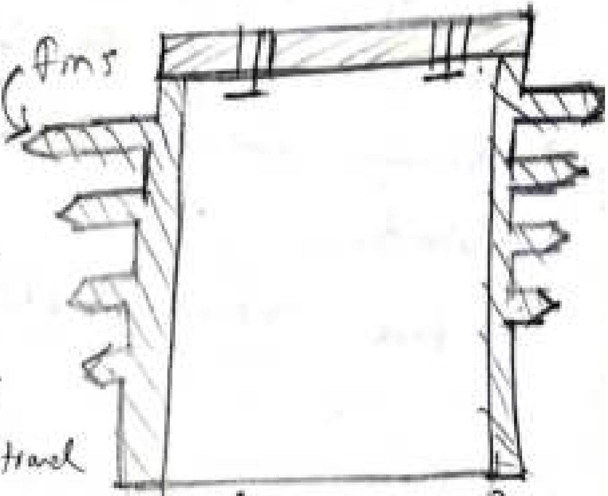

(Air cooling)

→ In this, heat is carried away by the air flowing over and around the engine cylinder, it is used in scooters, motor cycles.

→ Here fins are cast on the cylinder head and barrel which provide additional conductive and radiating surface.

Advantages:

1. Design of the engine becomes simpler as no water jackets are required.
2. Absence of cooling pipes, radiator etc.
3. No danger of coolant leakage.
4. Installation is easier.
5. Not subjected to freezing troubles.
6. Weight is less compared to water cooled engine.

Disadvantages:

1. Non-uniform cooling.
2. Maintenance is not easy.
3. Output is less than that of a liquid cooled engine.
4. ~~Non uniform coo~~ Movement is noisy.

2. Liquid cooling

→ In this cylinder walls and heads are provided with jackets through which the cooling liquid can circulate.

→ The heat is transferred from cylinder walls to the liquid by convection and conduction. The liquid becomes heated in its passage through the jacket. The heat from liquid in turn is transferred to air.

→ Various methods used for circulating the water around the cylinder

1. ~~Force~~ Thermo-syphon cooling :

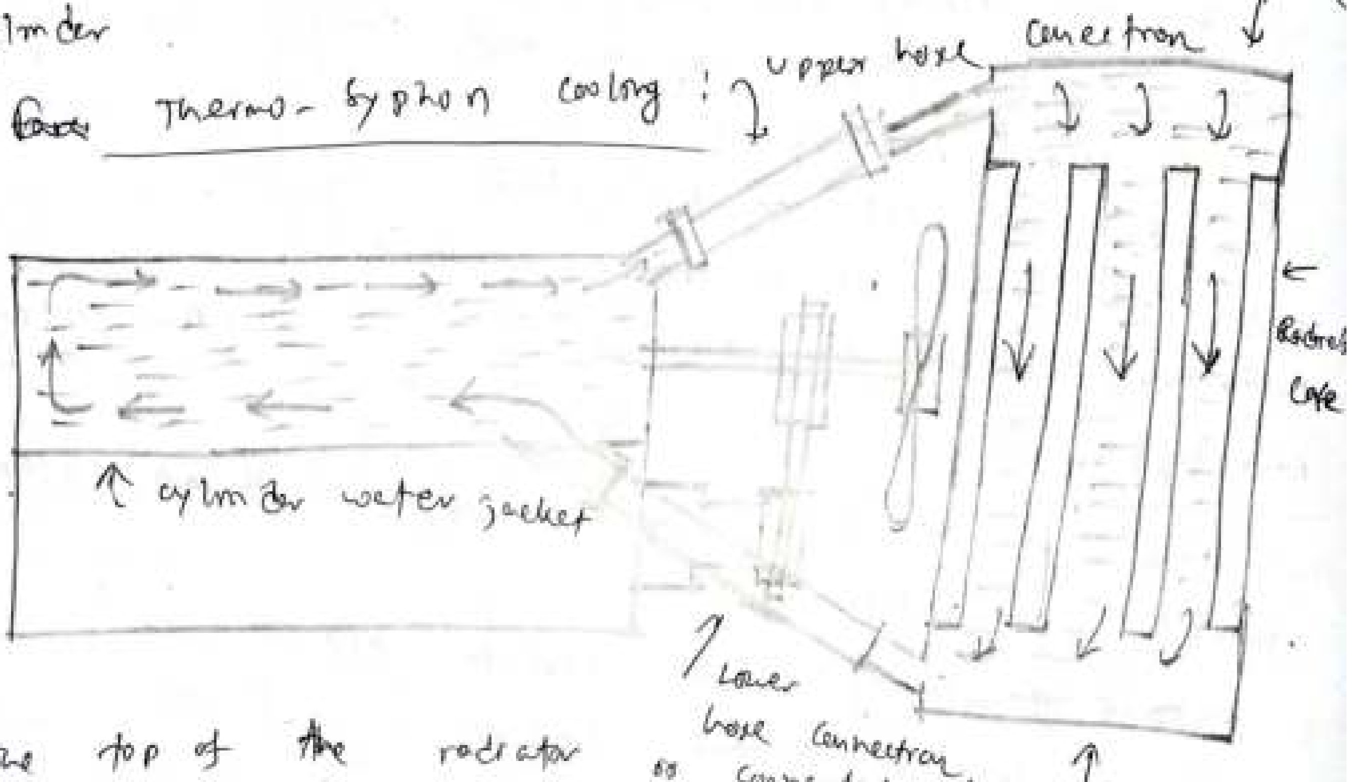

→ The top of the radiator is connected to the water jacket by a pipe and bottom of the top of radiator is connected to the bottom of the water jacket.

→ water travels down the radiator across which air is passed to cool it. The air flow can take place due to vehicle motion or a fan can be provided for the purpose

→ The system is quite simple and automatic and is without any water pump.

→ The rate of circulation is slow and insufficient.

→ The circulation of water starts only after the engine has become hot enough to cause thermo-syphon action.

2. Forced or pump system:

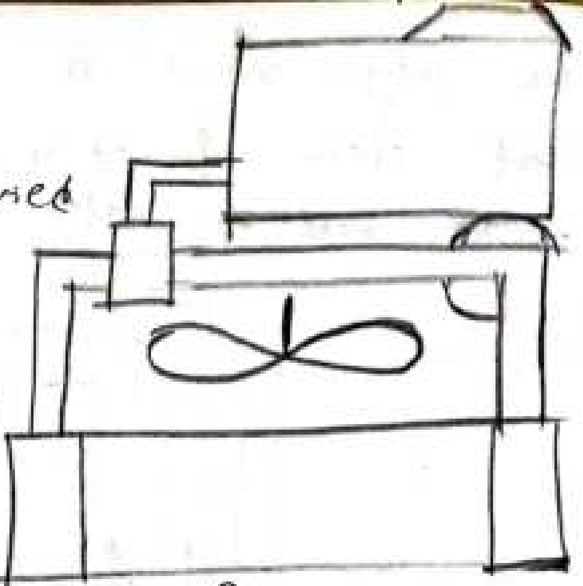

→ In this system, a pump is used to cause positive circulation of water in the water jacket.

→ Usually the pump is belt driven from the engine.

→ Advantage is that cooling is ensured under all conditions of operation. Forced or pump system.

▷ Demerits are:

1. Cooling is independent of temperature. May result in overcooling the engine.
2. While moving uphill, cooling requirement is increased as more fuel is burned. However coolant circulation is reduced.
3. As the engine is stopped, the cooling also ceases. This is undesirable because cooling must continue till the temp. is reduced to normal values.

3. Pressurised Water Cooling:

→ The boiling point of the coolant can be increased by increasing its pressure.

→ This allows a greater heat transfer to occur in the radiator due to larger temp. differential. Usually the water pressure is kept between 1.5 to 2 bar.

4. Evaporative cooling:

→ Also called steam or vapour cooling, the temp. of cooling water is allowed to reach a temp. of 100°C.

→ This method of cooling utilises high latent of vaporisation of water to obtain cooling with minimum water.

→ The cooling circuit is such that coolant is always liquid but steam formed is flashed off in the separate vessel.

→ The make up water so formed is sent back for cooling.

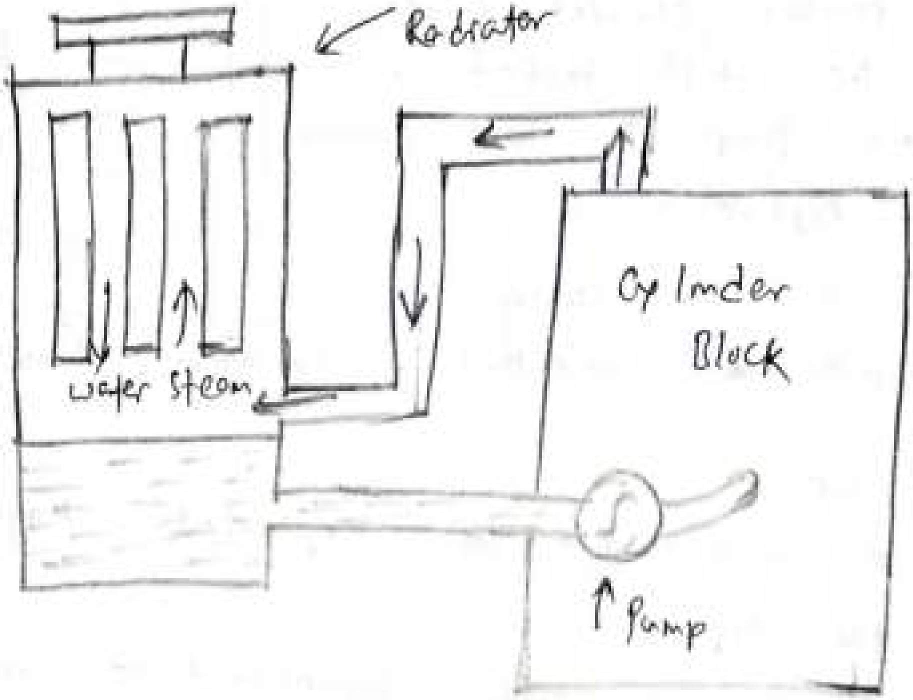

→ The cooling circuit is such that coolant is always liquid but the steam formed is flashed off in the separate vessel. ~~The~~

10.16 ENGINE LUBRICATION SYSTEM

Frictional forces causes wear and tear of rubbing parts of the engine and thereby the life of the engine is reduced. This requires that some substance should be introduced between the rubbing surfaces in order to decrease the frictional force between them. Such substance is called lubricant. The lubricant forms a thin film between the rubbing surfaces and prevents metal to metal contact. The various parts of an I.C. engine requiring lubrication are cylinder walls and pistons, big end bearings and crank pins, small end bearings and gudgeon pins, main bearing, cams and bearing valve tappet, and guides and timing gears etc. The functions of a lubricant are as follows:

1. *Lubrication.* It reduces wear and tear of various moving parts by minimising the force of friction and ensures smooth running of parts.
2. *Sealing.* It helps the piston ring to seal the gases in the cylinder.
3. *Cooling.* It removes the heat generated due to friction and keeps the parts cool.
4. *Cleaning.* To keep the bearings and piston rings clean of the products of wear by washing them away.
5. *Reducing noise.* To reduce the noise of the engine by absorbing vibrations.

The various lubricants used in engines are of three types :

(i) Liquid Lubricants.
(ii) Solid Lubricants.
(iii) Semi-solid Lubricants.

Liquid oil lubricants are most commonly used. Liquid lubricants are of two types : *(a)* Mineral Oils *(b)* Fatty oils. Graphite, white lead and mica are the solid lubricants. Semi solid lubricants or greases as they are often called are made from mineral oils and fatty-oils.

A good lubricant should possess the following properties :

(i) It should not change its state with change in temperature.
(ii) It should maintain a continuous films between the rubbing surfaces.
(iii) It should have high specific heat so that it can remove maximum amount of heat.
(iv) It should be free from corrosive acids.
(v) The lubricant should be purified before it enter the engine. It should be free from dust, moisture, metallic chips, etc. The lubricating oil consumed is nearly 1% of fuel consumption.

4.13.6. Lubrication Systems

Lubrication is the admittance of oil between two surface having relative motion. The purpose of lubrication may be one or more of the following :

1. To reduce friction and wear between the parts having relative motion.
2. To cool the surfaces by carrying away heat generated due to friction.
3. To seal a space adjoining the surfaces such as piston rings and cylinder liner.
4. To clean the surface by carrying away the carbon and metal particles caused by wear.
5. To absorb shock between bearings and other parts and consequently reduce noise.

The main parts of an engine which need lubrication are as given below :

(i) Main crank shaft bearings.

(ii) Big-end bearings.

(iii) Small end or gudgeon pin bearings.

(iv) Piston rings and cylinder walls.

(v) Timing gears.

(vi) Cam shaft and cam shaft bearings.

(vii) Valve mechanism.

(viii) Valve guides, valve tappets and rocker arms.

Various lubrication systems used for I.C. engines may be classified as :

1. Wet sump lubrication system.
2. Dry sump lubrication system.
3. Mist lubrication system.

Wet Sump Lubrication System

These systems employ a large capacity oil sump at the base of crank chamber, from which the oil is drawn by a low pressure oil pump and delivered to various parts. Oil then gradually returns back to the sump after serving the purpose.

(a) **Splash system.** Refer to Fig. 4.23. This system is used on some *small four stroke stationary engines.* In this case the caps on the big ends bearings of connecting rods are provided with scoops which, when the connecting rod is in the lowest position, just dip into oil troughs and thus directs the oil through holes in the caps to the big end bearings. Due to splash of oil it reaches the lower portion of the cylinder walls, crank shaft and other parts requiring lubrication. Surplus oil eventually flows back to the oil sump. Oil level in the troughs is maintained by means of a oil pump which takes oil from sump, through a filter.

Splash system is suitable for low and medium speed engines having moderate bearing load pressures. For high performance engines, which normally operate at high bearing pressures and rubbing speeds this system does not serve the purpose.

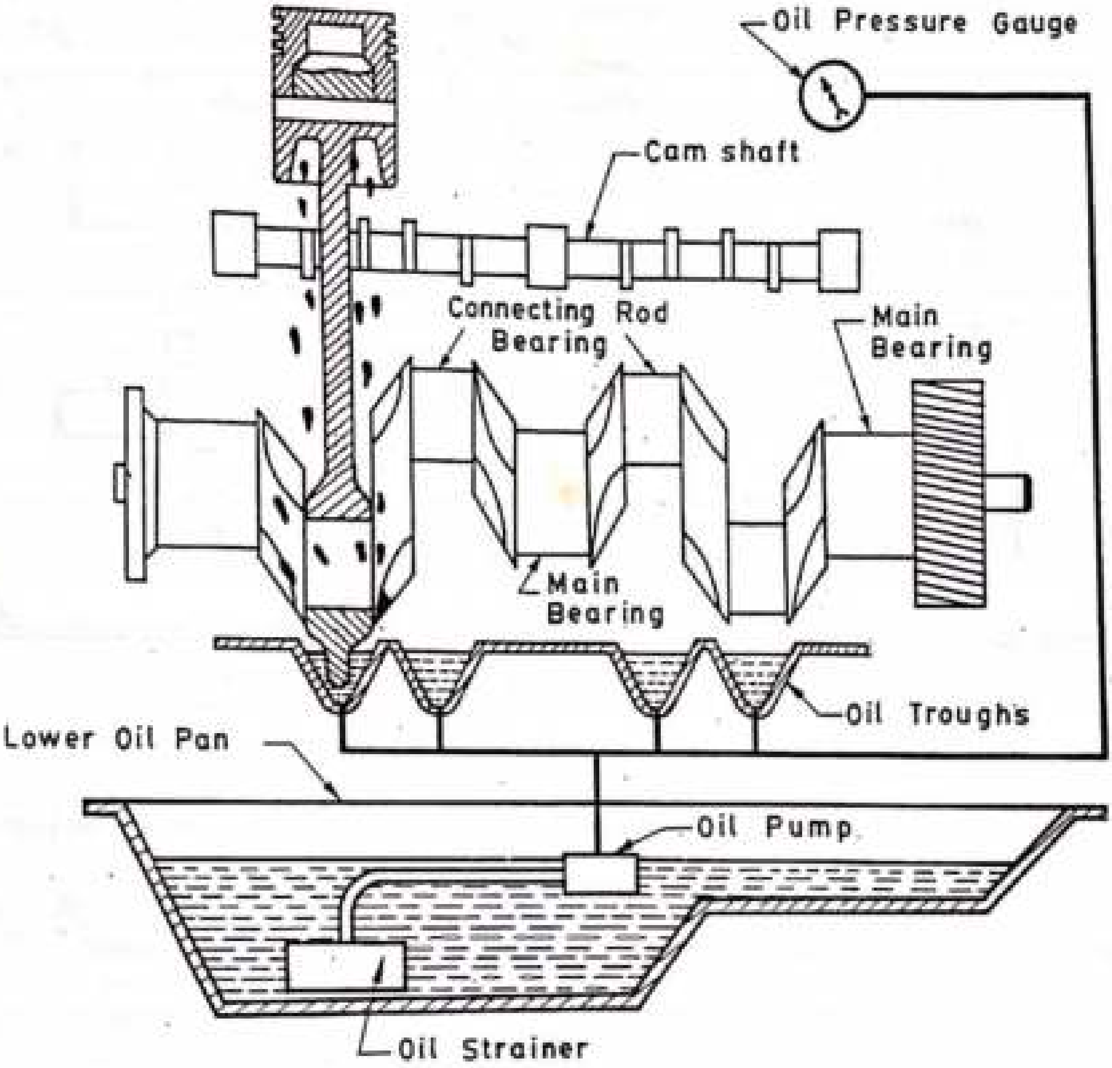

Fig. 4.23. Splash system.

(b) **Semi-pressure system.** This method is a combination of splash and pressure systems. It incorporates the advantages of both. In this case main supply of oil is located in the base of crank chamber. Oil is drawn from the lower portion of the sump through a filter and is delivered by means of a gear pump at pressure of about 1 bar to the main bearings. The big end bearings are lubricated by means of a spray through nozzles. Thus oil also lubricates the cams, crank shaft bearings, cylinder walls and timing gears. An oil pressure gauge is provided to indicate satisfactory oil supply.

The system is less costly to install as compared to pressure system. It enables higher bearing loads and engine speeds to be employed as compared to splash system.

(c) **Full pressure system.** In this system, oil from oil sump is pumped under pressure to the various parts requiring lubrication. Refer Fig. 4.24. The oil is drawn from the sump through filter and pumped by means of a gear pump. Oil is delivered by the pressure pump at pressure ranging from 1.5 to 4 bar. The oil under pressure is supplied to main bearings of crank shaft and camshaft. Holes drilled through the main crank shafts bearing journals, communicate oil to the big end bearings and also small end bearings through holes drilled in connecting rods. A pressure gauge is provided to confirm the circulation of oil to the various parts. A *pressure regulating valve* is also provided on the delivery side of this pump to prevent excessive pressure.

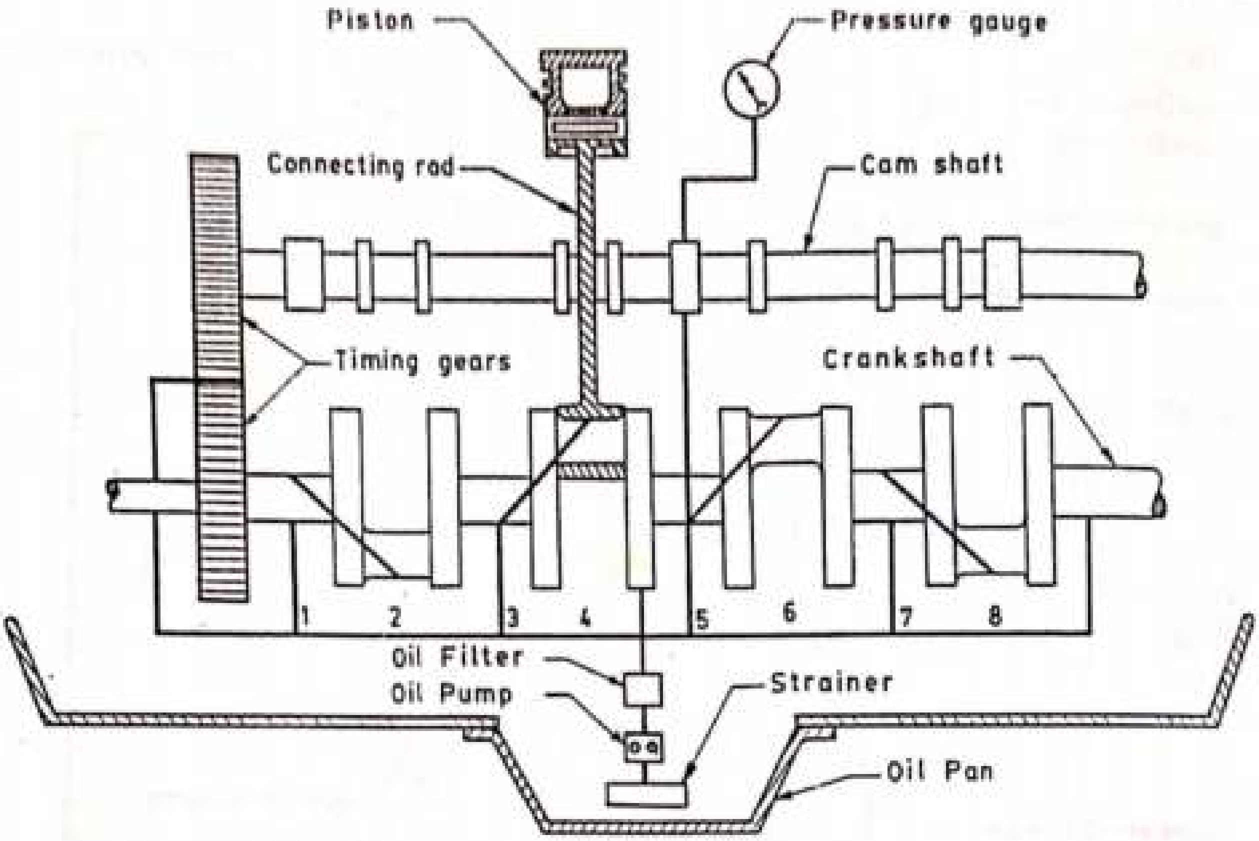

Fig. 4.24. Full pressure system.

This system finds favour from most of the engine manufacturers as it allows high bearing pressure and rubbing speeds.

The general arrangement of *wet sump lubrication system* is shown in Fig. 4.25. In this case oil is always contained in the sump which is drawn by the pump through a strainer.

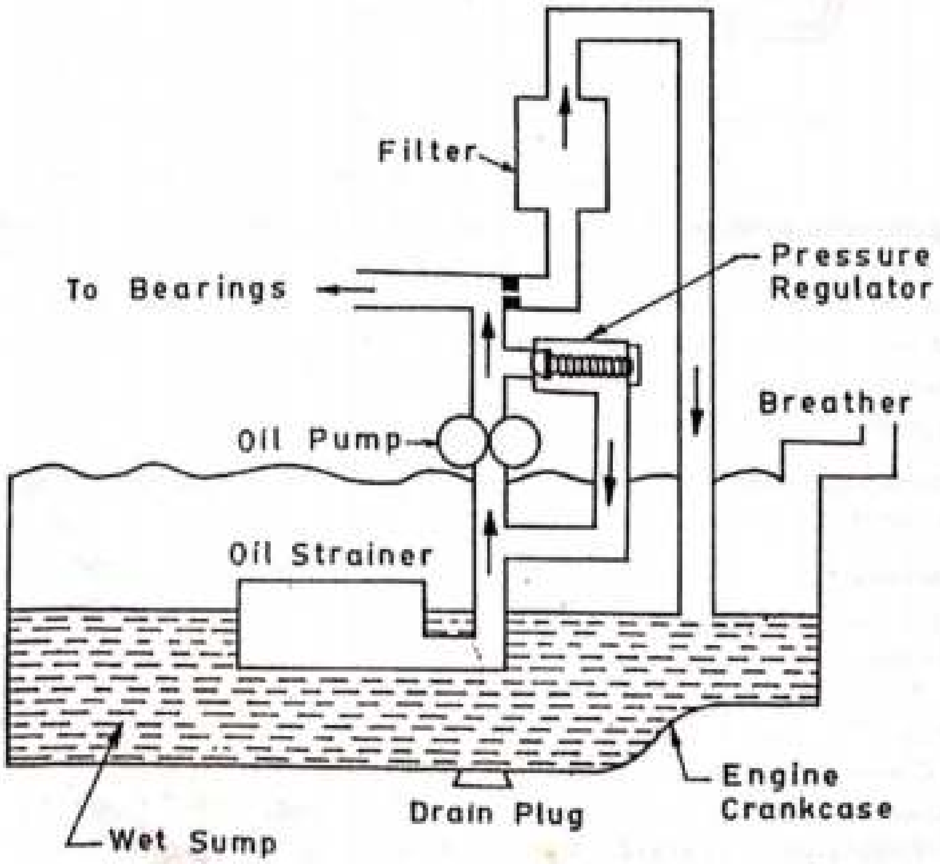

Fig. 4.25. Wet sump lubrication system.

2. Dry Sump Lubrication System

Refer Fig. 4.25. In this system, the oil from the sump is carried to a separate storage tank out side the engine cylinder block. The oil from sump is pumped by means of a sump pump through filters to the storage tank. Oil from storage tank is pumped *to the engine cylinder* through oil cooler. Oil pressure may varies from 3 to 8 kgf/cm^2. *Dry sump lubrication system is generally adopted for high capacity engines.*

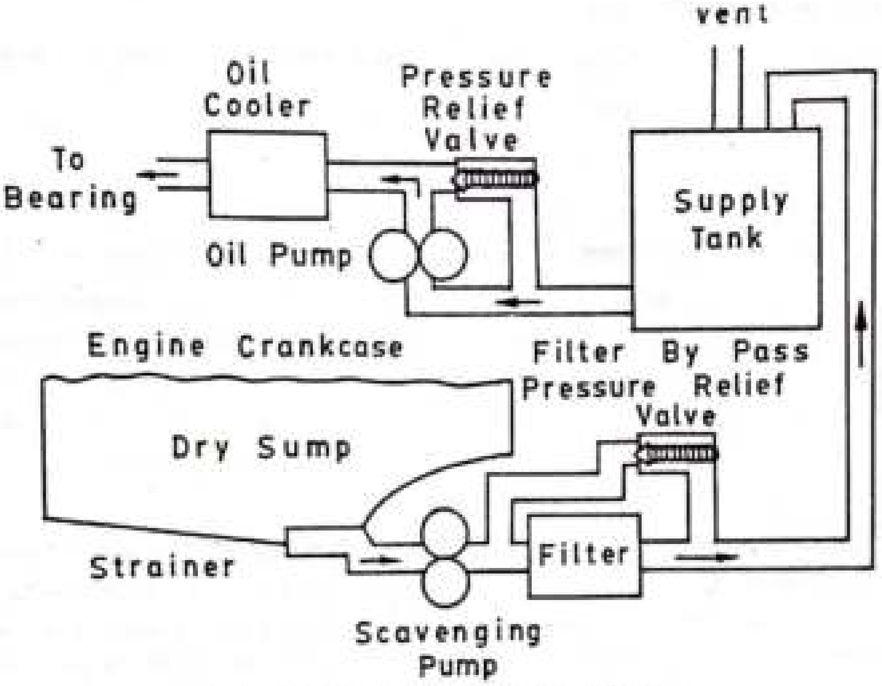

Fig. 4.26. Dry sump lubrication system.

3. Mist Lubrication System

This system is used for two stroke cycle engines. Most of these engines are crank charged, *i.e.* they employ crank case compression and thus, are not suitable for crank case lubrication. These engines are lubricated by adding 2 to 3 per cent lubricating oil in the fuel tank. The oil and fuel mixture is induced through the carburettor. The gasoline is vaporised ; and the oil in the form of mist, goes via crank case into the cylinder. The oil which impinges on the crank case walls lubricates the main and connecting rod bearings, and rest of the oil which passes on the cylinder during charging and scavanging periods, lubricates the piston, piston rings and the cylinder.

Advantages

1. System is simple.
2. Low cost (because no oil pump filter etc. are required).

Disadvantages

1. A portion of the lubricating oil invariably burns in combustion chamber. This bearing oil when burned, and still worse, when partially burned in combustion chamber leads to heavy exhaust emissions and formation of heavy deposit on piston crown, ring grooves and exhaust port which interferes with the efficient engine operation.
2. One of the main functions of lubricating oil is the protection of anti-friction bearings etc. against corrosion. Since the oil comes in close contact with acidic vapours produced during the combustion process, it rapidly loses its anti-corrosion properties resulting in corrosion damage of bearings.
3. For effective lubrication oil and fuel must be thoroughly mixed. This requires either separate mixing prior to use or use of some additive to give the oil good mixing characteristics.

4. Due to higher exhaust temperature and less efficient scavening the crank case oil is diluted. In addition some lubricating oil burns in combustion chamber. This results in 5 to 15 per cent higher lubricant consumption for two stroke engine of similar size.
5. Since there is no control over the lubrication oil, once introduced with fuel, most of the two stroke engines are *over-oiled* most of the time.

4.13.7. Engine Starting System

The following three are the commonly used starting systems in large and medium size engines :

1. Starting by an auxiliary engine
2. Use of electric motors or self starters
3. Compressed air system.

1. Starting by an auxiliary engine (generally petrol driven).

In this system an auxiliary engine is mounted closed to the main engine and drives the latter through a clutch and gears. The clutch is first disengaged and the auxiliary engine started by hand or by a self starter motor. When it has warmed up and runs normally the drive gear is engaged through the clutch, and the main engine is cranked for starting. To avoid the danger of damage to drive gear it is desirable to have an over-running clutch or starter type drive.

2. Use of electric motors or self starters

These are employed for small diesel and gasoline engines. A storage battery of 12 to 36 volts is used to supply power to an electric motor which is geared to the flywheel with arrangement for automatic disengagement after the engine has started. The motor draws a heavy current and is designed to be engaged continuously for about 30 seconds only, after which it is required to cool off, for a minute or so, and then re-engaged. This is done till the engine starts up. When the engine is running a small d.c. generator on the engine serves to charge the battery.

3. Compressed air system

The compressed air system is commonly used for starting large diesel engines employed for stationary power plant service. Compressed air at about 17 bar supplied from an air tank or bottle is admitted to a few of the engine cylinders making them work like reciprocating air motors to run the engine shaft. Fuel is admitted to the remaining cylinders and ignites in the normal way causing the engine to start. The air bottle or tank is charged by a motor or gasoline engine driven compressor. The system includes the following :

(i) Storage tank/vessel

(ii) A safety valve

(iii) Interconnecting pipe work.

Methods of Starting and Stopping Engines

Although starting procedure may differ from engine to engine but some common steps are listed below :

Starting of Engines

1. In case of *electric motor* starting check the condition of storage battery. If *compressed air system* is used, then air pressure may be checked first and the air system inspected for possible leakage.

2. As prescribed by the manufactures, all necessary checks for fuel, lubricating oil and cooling water should be made.

3. Crank the engine after ensuring that all load is put off and decompression device is in use, and then let it start.

10.22. ENGINE PERFORMANCE AND HEAT BALANCE SHEET

10.22.1 Engine Performance

(i) **IMEP (Indicated Mean Effective Pressure).** In order to determine the power developed by the engine, the indicator diagram of engine should be available. From the area of indicator diagram it is possible to find an average gas pressure which while acting on piston throughout one stroke would account for the net work done. This pressure is called indicated mean effective pressure (I.M.E.P.).

(ii) **IHP (Indicated Horse Power).** The indicated horse power (I.H.P.) of the engine can be calculated as follows :

$$\text{I.H.P.} = \frac{P_m L.A.N.\, n}{4500 \times k}$$

where

P_m = I.M.E.P. in kg/cm^2
L = Length of stroke in metres
A = Piston area in cm^2
N = Speed in R.P.M.
n = Number of cylinders
k = 1 for two stroke engine
= 2 for four stroke engine.

(iii) **Brake Horse Power (B.H.P.).** Brake horse power is defined as the net power available at the crankshaft. It is found by measuring the output torque with a dynamometer.

$$\text{B.H.P.} = \frac{2\pi NT}{4500}$$

where

T = Torque in kg.m.
N = Speed in R.P.M.

(iv) **Frictional Horse Power (F.H.P.).** The difference of I.H.P. and B.H.P. is called F.H.P. It is utilised in overcoming frictional resistance of rotating and sliding parts of the engine.

$$\text{F.H.P.} = \text{IHP} - \text{BHP}.$$

(v) **Indicated Thermal Efficiency** (η_i). It is defined as the ratio of indicated work to thermal input.

$$\eta_i = \frac{I.H.P. \times 4500}{W \times C_v \times J}$$

where

W = Weight of fuel supplied in kg per minute.
C_v = Calorific value of fuel oil in kcal/kg.
J = Joules equivalent = 427.

(*vi*) **Brake Thermal Efficiency (Overall Efficiency).** It is defined as the ratio of brake output to thermal input.

$$\eta_b = \frac{B.H.P \times 4500}{W \times C_v \times J}$$

(*vii*) **Mechanical Efficiency (η_m).** It is defined as the ratio of B.H.P. to I.H.P. Therefore,

$$\eta_m = \text{B.H.P./I.H.P.}$$

10.5 SITE SELECTION

While selecting the site for diesel engine power plant the following factors should be considered.

1. *Distance from load centre.* The plant should be located near the load centre. This will minimize the cost of transmission lines, the maintenance and power losses through them.

2. *Availability of water.* Water should be available in sufficient quantity at the site selected.

3. *Foundation conditions.* Sub-soil conditions should be such that a foundation at a reasonable depth should be capable of providing a strong support to the engine.

4. *Fuel transporation.* The site selected should be near to the source of fuel supply so that transportation charges are low.

5. *Access to site.* The site selected should have road and rail transporation facilities.

The site selected should be away from the town so that the smoke and other gases coming out of the chimneys do not effect the inhabitants.

GAS TURBINE POWER PLANT

→ The gas turbine is a rotary heat engine operating by means of a series of processes consisting of compression of air, increase of air temperature by the combustion of fuel, expansion of hot gases to the atmosphere, the whole being a continuous flow process.

→ Gas turbine consists of a compressor, a combustion chamber and a turbine unit. Air acts as a working fluid and is compressed in the compressor and the energy is added to it in the combustion chamber. The high energy fluid then expands in the turbine and thus mechanical energy is produced.

→ Part of this energy is used up in driving the compressor, which is usually mounted on the same shaft as that of the turbine. The net work is therefore the difference between the turbine work and compressor work.

→ Applications of gas turbine plants:

→ They may be used as peak load plants and stand by plants to steam, diesel or hydro power plants.

→ They are used in jet aircrafts and ships.

→ To work as combination plants.

→ To supply mechanical drive for auxiliaries.

→ They are economically used in combination with steam plant because high temp. exhaust gases coming out from gas turbines can be used to generate steam which can be used in steam turbine.

Advantages of over steam power plants:

1. It is smaller in size and weight as compared to an equivalent steam power plant.
2. The initial cost and operating cost of the plant is lower than the equivalent steam power plant.
3. The plant requires less water as compared to the condensing steam power plant.

4. The plant can be started quickly and can be put on load in a very short time.
5. There is no stand by losses where as in steam power plant these losses occur because boiler is kept in operation even when the turbine is not supplying any load.
6. The maintenance of the plant is easier and maintenance cost is low
7. Lubrication of the plant is easy. Lubrication is needed mainly in compressor, turbine main bearing and bearing of auxiliary component.
8. The plant does not require heavy foundations and buildings.
9. Great simplification of the plant due to the absence of boilers with their feed water evaporator and condensing system.
10. It is very reliable.
11. It has fewer auxiliaries
12. No coal handling and ash handling is required.

Disadvantages:

1. Major part of the work developed in the turbine is used to drive the compressor, therefore, net work output of the plant is low.
2. Since the temp. of the products of combustion becomes too high so service conditions become complicated even at moderate pressures.
3. Part load efficiency is low.
4. Air and gas filters have to be of very high quality so that no dust enters to erode and corrode turbine blades.

Advantages ~~of~~ over Diesel power plant:

1. Its weight - power ratio is less.
2. The turbine is vibration free as there are no imbalanced forces.
3. The operation cost is low as low grade fuel like kerosene or paraffin can be used.
4. The no. of moving parts are less, therefore the mechanical efficiency is high.
5. Lubrication system is simple.

Classification of gas turbine plants:

1. According to the cycle
   (a) open cycle plants (b) closed cycle plants.
2. According to the type of load.
   (a) Peak load plants (b) Stand by plants (c) Base load plants
3. According to the application
   (a) Aircraft (b) Locomotive (c) Marine (d) transport (e) Power station
4. According to the no. of shafts
   (a) Single shaft (b) Multi shaft
5. According to the fuel used
   (a) Liquid fuel (b) Solid fuel (c) Gaseous fuel.

Open cycle gas turbine plants:

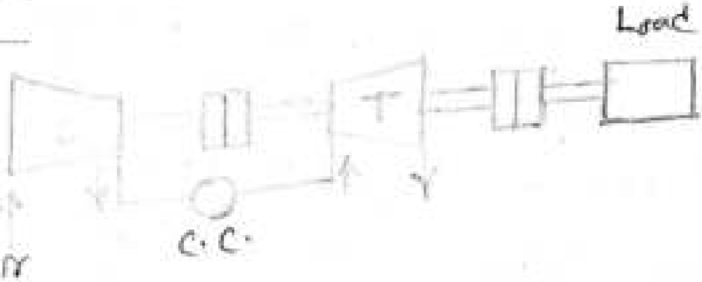

→ In this case fresh atmospheric air is drawn into by the compressor (C) continuously and heat is heat added by combustion of Air fuel in the working fluid (air) itself.

→ The products of combustion are expanded through the turbine (T) and exhausted to atmosphere.

Closed cycle gas turbine plant:

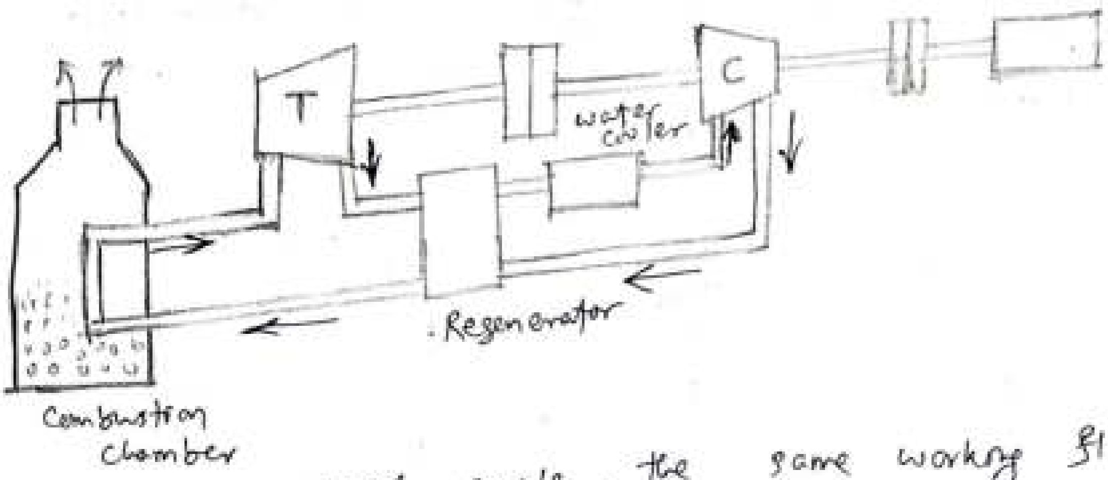

→ In the closed cycle, the same working fluid (air or some other stable gas) is constantly circulated.

→ The fuel is burnt in the combustion chamber and heat is transferred to the working medium through heat transfer surfaces.

→ Thus the working medium does not mix with the products of combustion. The working medium is cooled in the water cooler before it enters the compressor. This minimise compressor work.

→ Gases used in the gas turbine plant are as follows

(i) Helium (ii) Hydrogen (iii) N_2 (iv) NH_3 (v) C_2H_4 (ethylene) (vi) Krypton (Kr) (vii) Oxygen (O_2) (viii) CO_2 (ix) CH_4 (Methane)

9.11 COMPONENTS (ELEMENTS) OF A GAS TURBINE PLANTS

A simple gas turbine plant is shown in Fig. 9.12. It consists of compressor, combustion chamber and turbine. When the unit runs the atmospheric air is drawn into the compressor, raised to static pressure several times that of the atmosphere. The compressed air then flows to the combustion chamber, where the fuel is injected. The produces of combustion, comprising a mixture of gases at high temperature and pressure, are passed through the turbine where they expand and develop motive force for turning the turbine rotor. After expansion the gases leave the turbine at atmospheric pressure. The temperature of the products of combustion is nearly 1000°F to 1500°F. The temperature of the exhaust gases is in the range of 900°F to 1100°F. The compressor is mounted on the same shaft as that of turbine. Major portion of the work developed in the turbine is used to drive the compressor and the remainder is available as net power output.

1. **Turbine.**

Turbine drives the compressor and the load. Both impulse and reaction turbines can be used in gas turbine plants. As compared to steam turbines gas turbines have few stages because they operate on smaller pressure drops.

Axial flow type turbines are commonly used. The various requirements of turbines are as follows :

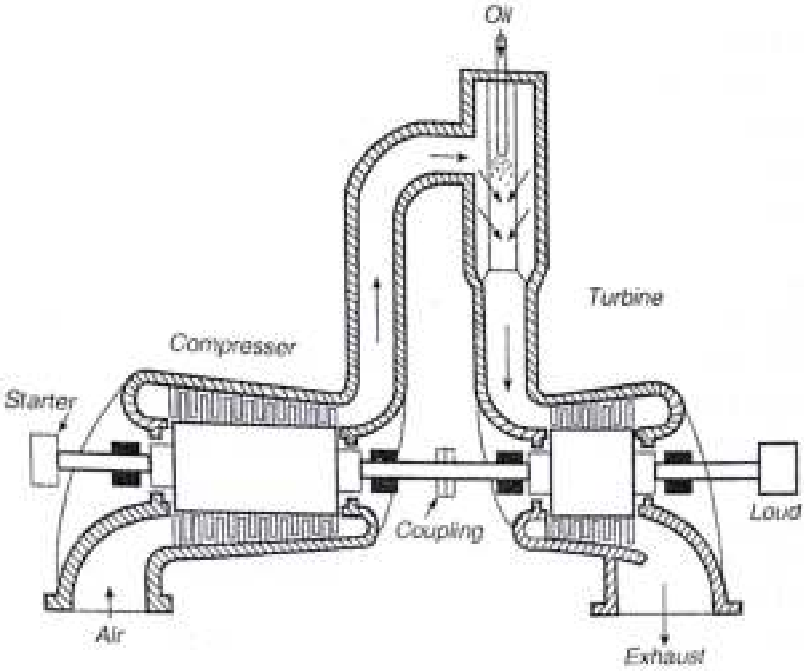

Fig. 9.12. A simple gas turbine plant.

(i) Light Weight
(ii) High Efficiency
(iii) Reliability in operation
(iv) Long working life.

2. Combustion Chamber.

In the combustion chamber, combustion of fuel takes place. The combustion process taking place inside the combustion chamber is quite important because it is in this process that energy, which is later converted into work by the turbine, is supplied. Therefore, the combustion chamber should provide thorough mixing of fuel and air as well as combustion products and air so that complete combustion and uniform temperature distribution in the combustion gases may be achieved. Combustion should take place at high efficiency, because losses incurred in the combustion process have a direct effect on the thermal efficiency of the gas turbine cycle. Further the pressure losses in the combustion chamber should be low and the combustion chamber should provide sufficient volume and length for complete combustion of the fuel.

Initially the temperature development in combustion chamber is too high. The difficulty is avoided by adding a satisfactory amount of air to maintain stable combustion condition and then the products of combustion are cooled to a temperature suitable for use in gas turbine by introducing secondary air. The sum of primary and secondary air supplied is total air needed for combustion. Fig. 9.13 shows the combustion chamber. In combustion chamber used for aircraft engines a large quantity of air is used to keep the temperature of combustion chamber to about 600°C. The air fuel ratio may be of the order of 60 : 1 in this case.

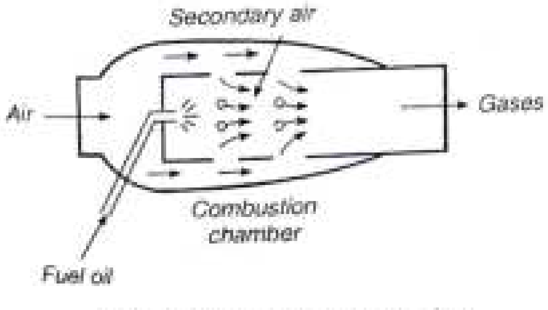

Fig. 9.13 Combustion chamber

The requirements of a combustion chamber are as follows :

(i) Low pressure loss
(ii) High combustion efficiency
(iii) Good flame stability

(iv) Low weight

(v) Thorough mixing of cold air and hot products of combustion to generate uniform temperature

(vi) Reliability

(vii) Low carbon deposit in turbine, and combustion chamber.

3. Compressor.

The various compressors used are reciprocating compressors, centrifugal compressors and axial flow compressors. The reciprocating compressors are not preferred due to the friction in sliding parts, more weight, less speed and inability to handle large volumes of air. For a gas turbine power plant of high output and efficiency generally pressure ratios of 10 : 1 or more is used. It is observed that when a single compressor with a pressure ratio not more than 4 : 1 is required the centrifugal compressor is the most suitable. It is quite rugged in construction, can operate more efficiently over a wide range of mass rate of flow of air than a comparable axial flow compressor. Centrifugal compressor is mainly used in super chargers and in jet aircraft plants, where lower pressure ratios and small volumes of air is needed.

For higher pressure ratios multi-stage centrifugal compressor does not prove to be as useful as an equivalent axial flow compressor. Therefore, when high pressure ratios are needed, axial compressor is advantageous and is always used for industrial gas turbine installations. Further it is desirable that more than one compressor should be used when the pressure ratio exceeds 6 : 1. Although the axial flow compressor is heavier than the centrifugal compressor but it has higher efficiency than the centrifugal compressor.

It is important that air entering the compressor should be free from dust. Therefore, air should be passed through a filter before it enters the compressor. Air filters are not needed in the closed cycle system.

(a) **Centrifugal Compressor.** It consists of stationary casing and rotating impeller. Impeller is provided with blades. When the impeller rotates the air enters axially and leaves radially. When the impeller rotates the pressure in the region *R* falls and, therefore, the air enter through the eye. The air then flows radially outward through the impeller blades. After that the air flows through the converged passages of diffuser blades and finally the air flows to compressor outlet (Fig. 9.14).

(b) **Axial Compressor.** This compressor (Fig. 9.15) is quite commonly used in gas turbines. It consists of stator which enclose rotor *(R)*. Both stator and rotor are fitted with rings of blades (*RB* - Rotor Blades, *SB* - Stator Blades). In this compressor the air flows in an axial direction from inlet to outlet. Air entering at one end as shown, flows through the alternatively arranged rings and gets compressed successively.

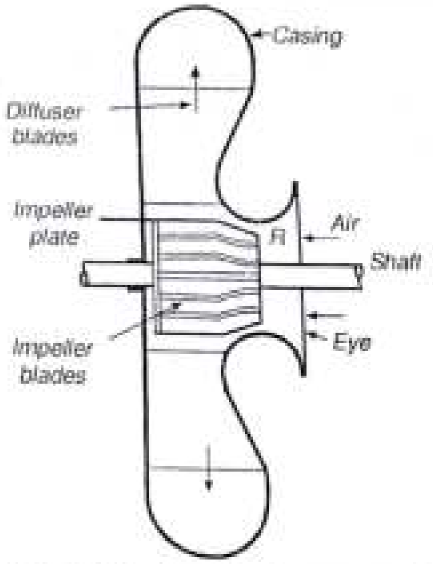

Fig. 9.14. Centrifugal compressor.

4. Inter-coolers.

These are used to cool the air between stages when multistage centrifugal compressors are employed. This reduces work input to the compressor. The cooling of compressed air is generally done with the help of cooling water. The water is circulated with the help of pump through the tubes. The compressed air is made to flow partly parallel and partly across the water flow with the help of baffles. The baffles are used to make the air to flow in contact for longer duration with heat transfer surface so as to increase the effectiveness of this heat exchanger.

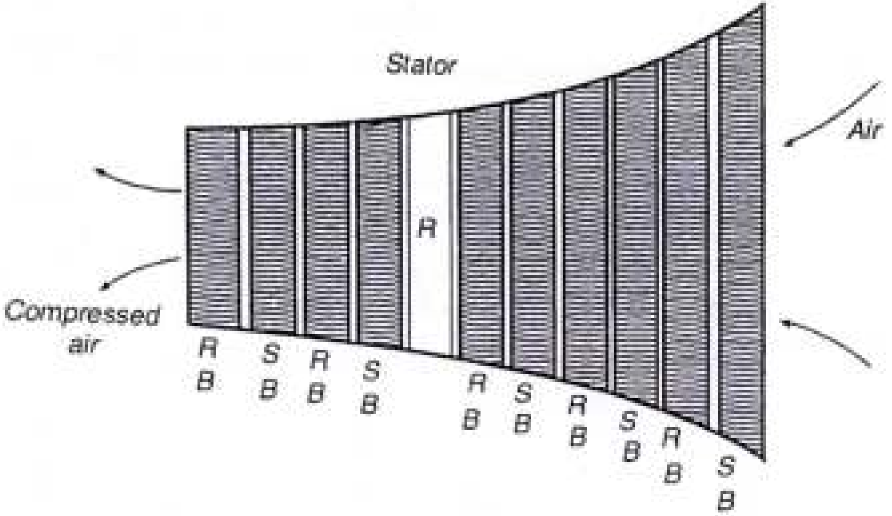

Fig. 9.15. Axial compressor

5. **Regenerators.**

The regenerators which are commonly used in gas turbine plants are of two types, namely, recuperate and regenerator. In a recuperative type of heat exchanger, the air and hot gases are made to flow in counter-flow direction as it gives high average temperature difference causing the heat flow effectively.

A regenerative type heat exchanger consists of a heat exchanging member which is exposed alternatively to the hot exhaust gases and cooler compressed air. It absorbs the heat from the hot gases and gives it up when exposed to the air. Though these regenerative type heat exchangers have high capital cost, it has principal advantages of lightness and smaller size for the same heat transferring capacity and low pressure drop.

6. **Gas Turbine Auxiliaries.**

The gas turbines need additional equipment for serving the main components, these include: starting motor or engine, lubricating oil pump, fuel control system, oil coolers and filters, silencers, air and gas ducts and plant control panel.

9.15 FUELS FOR GAS TURBINES

Various fuels used by gas turbine power plants are liquid fuels, gaseous fuels such as natural gas, blast furnace gas, producer gas, coal gas and solid fuels such as pulverised coal. Care should be taken that the oil fuel used should not contain moisture and suspended impurities.

The different types of oils used may be distillate oils and residual oils. The various paraffins used in gas turbine are Methane, Ethane, Propane, Octane (gasoline) and Dodecane (kerosene oil). Out of these gasoline and kerosene or blend of the two are commonly used.

Qualities of Fuel

Some of the important properties to be considered while selecting the fuel for gas turbine are as follows :

1. **Volatility.** The properties has a major effect on starting and combustion efficiency of the engine particularly at low temperature and other adverse conditions. The volatility of the fuel should be such that it is conductive to a quick and successful restart blowout of flame. Highly volative fuels are also not desirable as they have the following disadvantages:
   - *(i)* They are more susceptible to fire (although they have less tendency to explode).
   - *(ii)* They are conductive to vapour lock and to excessive loss of fuel during flight because of evaporation of certain lighter hydrocarbons. Therefore, in case of aircraft gas turbines in which the quantity of fuel used is sufficiently high, the fuel wastage will also be more if the fuel is highly volatile.
2. **Combustion products.** The products of combustion should not be in the form of solids because they tend to deposit on the combustion chambers, turbine blades and vanes and cause a loss in efficiency.
3. **Energy contents.** Fuel should have greater heating value so that fuel consumption may be less.
4. **Lubricating properties.** The fuel should provide a certain amount of lubrication of friction surface of fuel pumps.
5. **Availability.** The fuel selected should be available in large quantities so that it is cheaper.

Comparison of Kerosene Oil and Gasoline

Kerosene is quite commonly used in aircraft gas turbines. It is not as volatile as gasoline and, therefore, there is less possibility of vapour lock and fuel loss. But its combustion efficiency is low compared to gasoline. The lubrication properties of gasoline are poorer. About 5 to 20% of a barrel of crude may be refined kerosene whereas 40 to 50% of a barrel of crude oil be refined into gasoline which shows that gasoline can be available in large quantities.

Air Fuel Ratio

Air fuel ratio in the gas turbines is nearly 60 : 1.